SAFEMATIC

GENERAL
Read carefully the instructions before installing this unit. Verify the technical characteristics of the motor in order to assure the compatibility with the device.

DESCRIPTION
Electronic system for protection and control of single-phase electric pumps.
This unit stops the pump when is detected dry-running operation or overcurrent, it also warns about fast-cycling operation due to air pressure loss of the accumulation tank.

CLASSIFICATION AND TYPE
According to IEC 60730-1 and EN 60730-1 this unit is a motor protection device, electronic, independent assembly, with action type 1B (microdisconnection). Operating value: I <30% I learned. Pollution degree 2 (clean environment). Rated impulse voltage: cat II / 2500V. Temperatures for ball test: enclousure (75) and PCB (125).

OPERATING CHARACTERISTICS
- Dry-run protection.
- Overcurrent protection.
- 2 configuration systems: self-learning and accurate.
- ART Function (Automatic Reset Test). When the device has stopped the pump by the intervention of the dry-running protection system, the ART tries, with scheduled basis, to re-start the pump in order to restore the water supply. See "ART. Automatic reset function".
- Fast cycling: when the hydropneumatic tank has lost too much air and, consequently, frequent start-stop cycles are produced this alarm is activated.
- Manual RESET push-button.
- Warning led-lights: POWER, ALARM and ON. See "CONTROL PANEL".
- Integrated Schuko socket for pump connection (optional).
- 2 possible ways of connection to the mains supply:
  - Integrated Schuko plug (type S).
  - Cables with plugs type G or B for wall-mounted applications (Type W) .

TECHNICAL CHARACTERISTICS
- Rated motor power : 0,37-2,2KW
- Power supply: ~1 x 110-230Vac
- Frecuency: 50/60Hz
- Max. current: 30(16) A
- protection degree: IP65 (IP44 for type S)
- Max. environment temperature: 50ºC
- Net weight (type S): 0,3 kg
- Net weight (type W with cables): 0.7 kg

CONTROL PANEL (diagram D)
Following table summarizes the meaning of the possible led-lights combinations. Where:
- "o" means ON.
- ((o)) means slow flashing.
- (((O))) means fast flashing.

	POWER	ALARM	ON
Poswer supply	O		
Pump ON	O		O
Overcurrent ALARM	O	O	
Definitive dry-running ALARM	O	(((O)))	
Dry-running ALARM with ART activated	O	((O))	
Dry-running ALARM+ ART + PUMP ON	O	((O))	O
Stand-by	O	O	O
SELF-LEARNING SEQUENCE	((O))	((O))	O
ACCURATE-LEARNING SEQUENCE	((O))		O
FAST-CYCLING WARNING	O		((O))
DRY-RUNNING DETECTION	O		(((O)))

INSTALLATION.
The SAFEMATIC device must be inserted between the power supply and the power inlet of the pressure switch (diagram A).
It is essential, before connecting the SAFEMATIC to verify that the hydraulic system works properly, especially the hydropneumatic tank is properly pressurized and the pressure switch set correctly.
After that, learning must be made of the operating parameters of the installation. This learning can be automatic or accurate if the installer wants to fully control the configuration.

ELECTRIC CONNECTION (diagrams A and D)
The electric connection must be performed by qualified personal in compliance with regulation of each country.
Before doing manipulations inside the device, it must be disconnected from the electric supply.
Wrong connection could spoil the electronic circuit.
The manufacturer declines all responsability in damages caused by wrong connections.
Check if power supply is beetween 115-230V.

Type W
Unit is delivered with their cables but, if for any reason must be cabled again follow indications on diagram D:
- Use cables H07RN-F 3G1 or 3G1,5 depending on the power installed.
- Connect U, V and ⏚
- Connect L1, L2 and ⏚
- The earth conductor must be longer than the others. It will be the first one to be mounted during the assembly and the last one to be disconnected during the dismantling. **The earth conductors connections are compulsory!**

Type S: the device is directly connected to a Schuko socket of the electric supply and the mechanical pressure switch to the socket Schuko of the Safematic cover.

LEARNING PROCEDURES
1. Self-learning **(diagrams B1)**:

PHASE	ACTION	REACTION OF THE SYSTEM
1	Starting the SELF-LEARNING procedure when: • First time the unit is connected (STAND-BY). • By keeping pressed RESET push-button during 10 seconds, leaving the system in STAND-BY..	PUMP STOPPED + 3 LED-LIGHTS ON
2	PRESS RESET PUSH-BUTTON (1 click).	PUMP STARTS + 2 LED-LIGHTS FLASHING
3	After 10 complete operating cycles (START/STOP OF THE PUMP), the self-learning procedure finishes.	LED POWER ON

During PHASE 3, operating parameters are automatically calculated.

2. Accurate learning **(diagrams B2)**:

PHASE	ACTION	REACCIÓN DELSISTEMA
1	Starting the ACCURATE-LEARNING procedure when: • First time the unit is connected (STAND-BY). • By keeping pressed RESET push-button during 10 seconds, leaving the system in STAND-BY..	PUMP STOPPED
2	• Open the taps. • Wait until the hydraulic system is completely empty. • Keep pressed RESET button during 10 seconds.	PUMP STARTS + POWER LED-LIGHT FLASHING
3	• Wait for 10 seconds. • Close all the taps. • The pump will stop when it reaches the cut-out pressure adjusted at the pressure switch.	LED POWER ON

During PHASE 3, operating parameters are automatically calculated.

WARNINGS AND ALARMS
- Alarm Over current is activated when 30% of the maximum power recorded is exceeded. The system performs four restart attempts after which definitely can block the pump operation. Normal operation can be restored clicking the RESET button.
- When is detected a dry-running operation, this alarm is activated and started a procedure of automatic reset (ART), making a first automatic attempt of starting the pump at 5 minutes and then an attempt every 30 minutes for 24 hours. In the case of detecting that the water supply is restored the alarm will be reset automatically. This alarm can also be reset manually with the RESET button.
  When the dry-running alarm is activated, LED ON makes fast flashes while ART is trying to restore the system. If the alarm is definitive ALARM LED-LIGHT keeps flashing fastly.
- The detection of fast-cycling is activated when the system detects START/STOP cycles too fast as a result of an air leak in the hydrosphere. The pump will continue to operate and this situation is indicated by a slow flash of LED ON. This alarm can be restored with the RESET button.

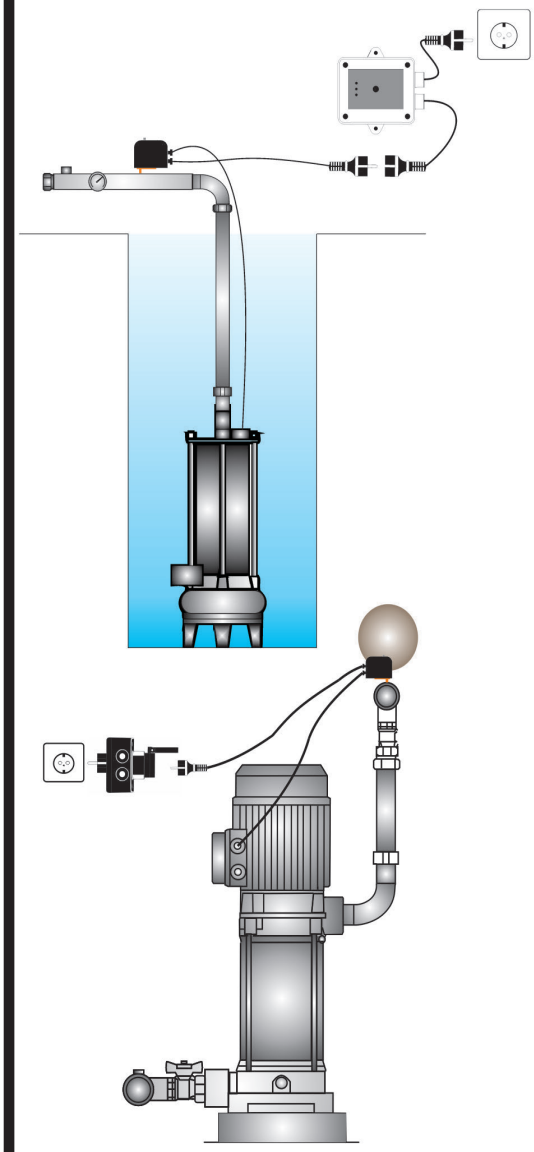

A

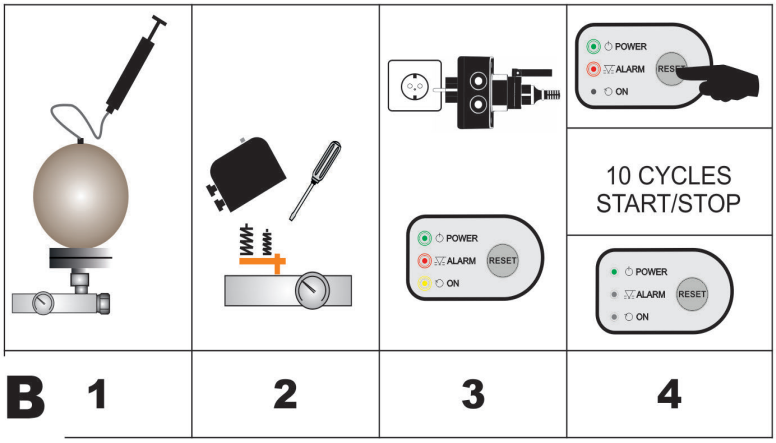

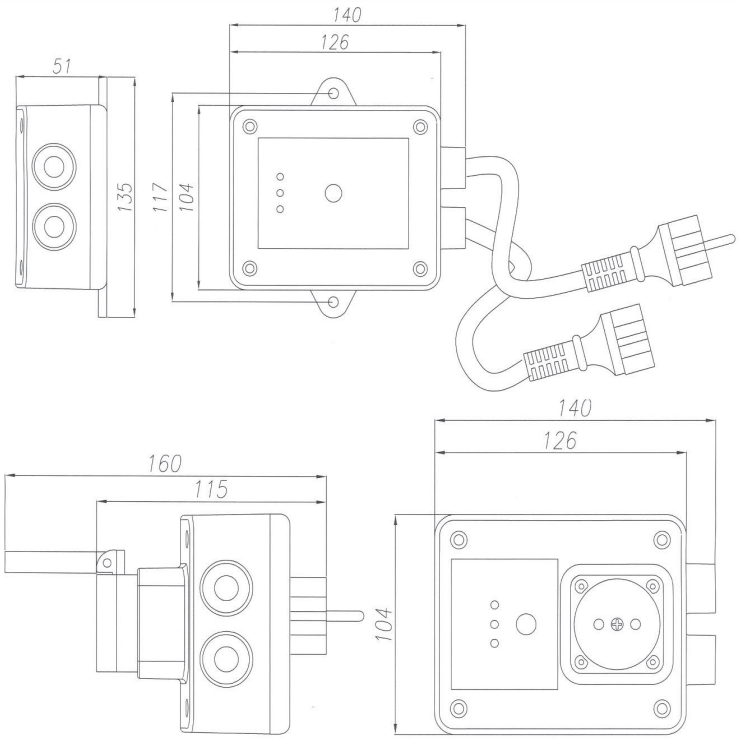

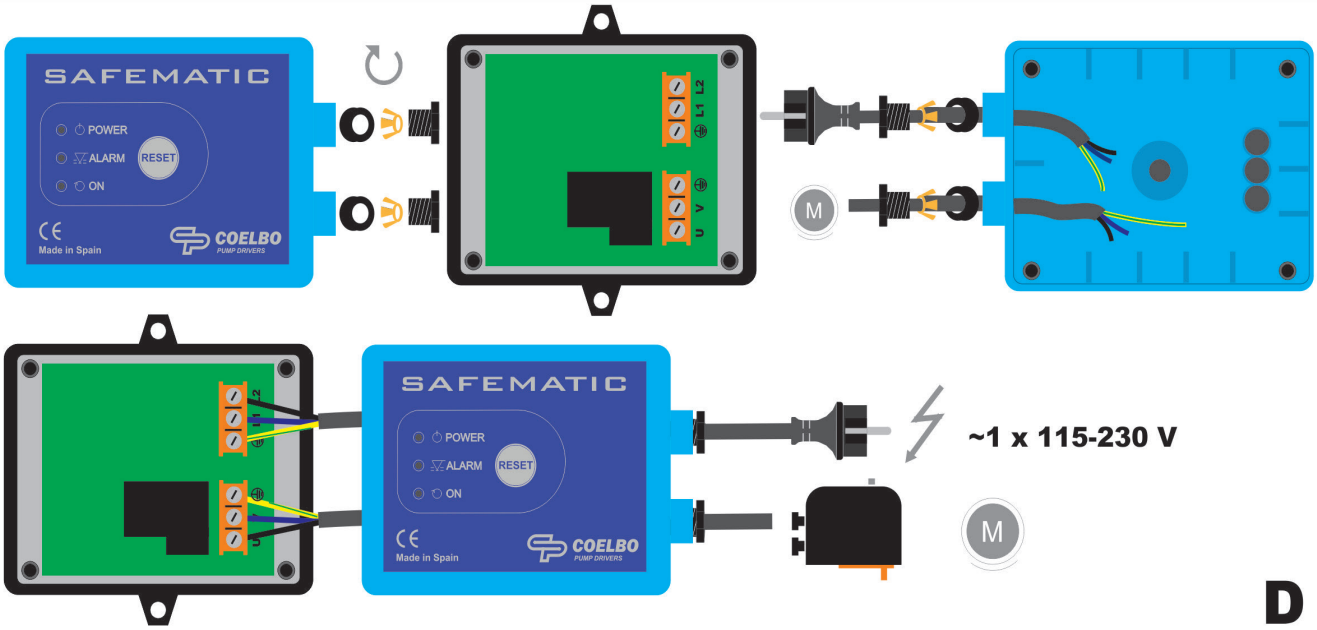

Rischio di danno all gruppo de pressione o al´impianto.
Risk of damaging the pressure assemblies and/or the plant.
Risque de dommage au groupe de pression et/ou a à l´installation.
Riesgo de daño al grupo de presión o a la instalación.
خطر تعرض مجموعة الضغط أو بالجهاز لأضرار.

Risk by electric shock.
Rischio di scosse elettriche.
Risque de choc électrique.
Riesgo por energía eléctrica.
خطر بسبب التيار الكهربائي.

Rischio per le persone e/o per gli oggetti.
Risk for people and/or objects.
Risque pour les objets et/ou de gens.
Riesgo para personas y/o objetos.
خطر على الأشخاص و/أو الممتلكات.