JP and JP Booster

Installation and operating instructions

GRUNDFOS

JP and JP Booster

English (GB)

Installation and operating instructions 4

Original installation and operating instructions

Table of contents

1. General information 4
1.1 Hazard statements 5
1.2 Notes 5
1.3 Target group. 5

2. Product introduction 6
2.1 Product overview, JP 6
2.2 Product overview, JP Booster 7
2.3 Intended use 7
2.4 Pumped liquids 7
2.5 Identification. 8

3. Receiving the product. 9
3.1 Inspecting the product 0
3.2 Scope of delivery, JP 9
3.3 Scope of delivery, JP Booster 9

4. Installation requirements 9
4.1 Location 9
4.2 Installation of the product in a frosty environment 9
4.3 Ambient temperature during operation 9
4.4 Minimum space 9

5. Mechanical installation 10
5.1 Mounting the product 0
5.2 Attaching the lifting handle 0
5.3 Connecting the pipe system 0
5.4 Installation examples 11

6. Electrical connection 12
6.1 Connecting products with a plug 0
6.2 Wiring diagram, JP 13
6.3 Motor protection. 13
6.4 Electrical connection, PM START 13

7. Startup of the product. 15
7.1 Priming the product 0
7.2 Starting up the product 0

8. Service 16
8.1 Maintenance 16
8.2 Maintaining the pressure tank 0
8.3 Service kits 17

9. Taking the product out of operation . . 0
9.1 Draining JP and JP PT-V 0
9.2 Draining JP PT-H 0
9.3 Storage of the product 17
9.4 Frost protection 17

10. Fault finding the product 18
10.1 The pump does not start 18
10.2 The pump stops unexpectedly during operation and starts again after a while . . . 18
10.3 The pump runs, but does not deliver the expected amount of water 18
10.4 Fault finding boosters with a pressure manager. 19
10.5 Fault finding boosters with a pressure tank 20
10.6 Fault finding the pressure switch 20

11. Technical data 21
11.1 Operating conditions 21
11.2 Head and flow rate 22
11.3 Inlet pressure 22
11.4 Miscellaneous data 22

12. Disposing of the product 22

13. Document quality feedback 22

1. General information

This appliance shall not be used by children.

Children shall not play with the appliance.

Cleaning and user maintenance shall not be carried out by children.

Appliances can be used by persons with reduced physical, sensory, or mental capabilities, as well as persons with a lack of experience and knowledge. This requires that they are given supervision or instruction concerning the use of the appliance in a safe way and that they understand the hazards involved.

Read this document before you install the product. Installation and operation must comply with local regulations and accepted codes of good practice.

1.1 Hazard statements

The symbols and hazard statements below may appear in Grundfos installation and operating instructions, safety instructions and service instructions.

DANGER

Indicates a hazardous situation which, if not avoided, will result in death or serious personal injury.

WARNING

Indicates a hazardous situation which, if not avoided, could result in death or serious personal injury.

CAUTION

Indicates a hazardous situation which, if not avoided, could result in minor or moderate personal injury.

The hazard statements are structured in the following way:

SIGNAL WORD

Description of the hazard

Consequence of ignoring the warning

- Action to avoid the hazard.

1.2 Notes

The symbols and notes below may appear in Grundfos installation and operating instructions, safety instructions and service instructions.

Observe these instructions for explosion-proof products.

A blue or grey circle with a white graphical symbol indicates that an action must be taken.

A red or grey circle with a diagonal bar, possibly with a black graphical symbol, indicates that an action must not be taken or must be stopped.

If these instructions are not observed, it may result in malfunction or damage to the equipment.

Tips and advice that make the work easier.

1.3 Target group

These installation and operating instructions are intended for professional as well as non-professional users.

2. Product introduction

Grundfos jet pumps and boosters are designed for domestic use and ensure a constant supply of clean water to households, gardens and light commercial applications.

JP

JP is a self-priming, single-stage centrifugal jet pump. The jet pump has an excellent suction capacity and is designed for long and trouble-free operation. The built-in ejector with guide vanes ensures optimum self-priming properties. JP is small and compact, and the lifting handle makes JP handy and easy to carry. The pump housing is made of stainless steel.

JP boosters

JP boosters are compact systems for pressure boosting with pressure control. The pressure control gives more comfort to the user, as it allows the pump to start and stop automatically according to demand.

JP boosters are available in the following variants:

- JP PM: a jet pump with a pressure manager
- JP PT-V: a jet pump with a vertical pressure tank and a pressure switch
- JP PT-H: a jet pump with a horizontal pressure tank and a pressure switch.

TM088830

Left to right: JP PT-V, JP PT-H, JP PM and JP

2.1 Product overview, JP

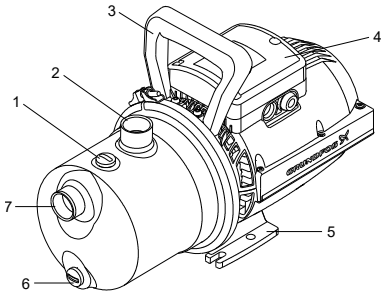

TM072509

Pos.	Description
1	Priming plug
2	G1 outlet connection
3	Lifting handle
4	Terminal box and cable connection
5	Base plate
6	Drain plug
7	G1 inlet connection

2.2 Product overview, JP Booster

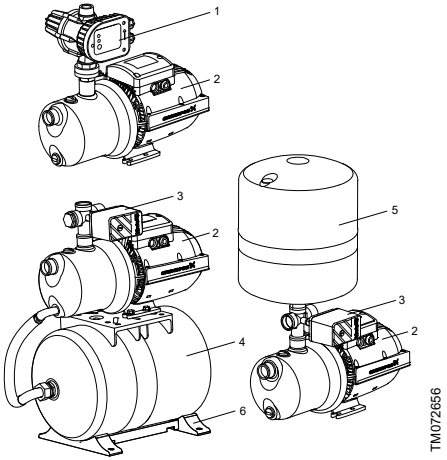

JP PM (top), JP PT-H (left), JP PT-V (right)

Pos.	Description
1	Pressure Manager
2	JP pump
3	Pressure switch
4	Pressure tank, horizontal
5	Pressure tank, vertical
6	Base plate

2.3 Intended use

Only use the product according to the specifications stated in these installation and operating instructions.

The product is suitable for pressure boosting of clean water in domestic water-supply systems.

Related information

2.4 Pumped liquids

7. Startup of the product

2.3.1 Intended use of the AISI 316 variant

WARNING
Electric shock
Death or serious personal injury

- Do not use the product for cleaning and other maintenance of swimming pools or similar places if people are in the water.

CAUTION
Impurities in the water
Minor or moderate personal injury

- Do not use the product for drinking water.

The AISI 316 variant of the JP pump is especially suitable for pool-cleaning and saltwater applications.

2.4 Pumped liquids

WARNING
Flammable material
Death or serious personal injury

- Do not use the product for flammable liquids such as diesel oil, petrol or similar liquids. The product must only be used for water.

WARNING
Toxic material
Death or serious personal injury

- Do not use the product for toxic liquids. The product must only be used for water.

WARNING
Corrosive substance
Death or serious personal injury

- Do not use the product for aggressive liquids. The product must only be used for water.

If the water contains sand, gravel or other debris, there is a risk of pump blockage and pump damage. Install a filter on the inlet side or apply a floating strainer to protect the pump.

The product is suitable for pumping clean, thin, non-aggressive, non-toxic and non-explosive liquids without solid particles or fibres. Examples of liquids:

- potable water
- rainwater.

Related information

2.3 Intended use

7. Startup of the product

2.5 Identification

2.5.1 Nameplate example for JP and JP Booster

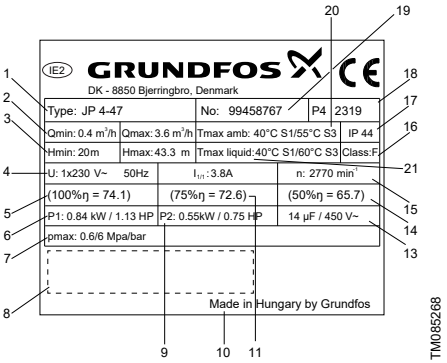

Pos.	Description
1	Type
2	Min. and max. flow rate
3	Min. and max. head
4	Supply voltage and frequency
5	Efficiency at 100 % load
6	Power consumption
7	Max. pressure
8	Approvals
9	Rated power
10	Country of origin
11	Efficiency at 75 % load
12	Full-load current
13	Capacitor data
14	Efficiency at 50 % load
15	Speed of rotation
16	Insulation class
17	Enclosure class
18	Factory code and production code (year and week)
19	Product number
20	Max. ambient temperature
21	Max. liquid temperature

Related information

- *[TOPIC NOT IN MAP (empty topicContent)]*
href=Inspecting-the-product-(ta)-W-s2650.dita

2.5.2 Type key, JP pump and booster

Example:

JP . 3- . 42 . PT- . V . 1x230 V . 50 Hz . 2m . SCHUKO . HU

	Description
JP	Jet Pump
3-	Max. flow rate [m^3/h]
42	Max. head [m]
PT-	Booster type, if applicable: • PT: Pressure Tank • PM: Pressure Manager • PS: Pressure Switch
V	Tank type, if applicable: • V: Vertical • H: Horizontal
1x230 V	Voltage [V]
50 Hz	Frequency [Hz]
2m	Cable length [m]
SCHUKO	Plug type
HU	Country of origin

3. Receiving the product

3.2 Scope of delivery, JP

The box contains the following items:

- 1 Grundfos JP pump
- 1 lifting-handle kit
- 1 quick guide
- 1 safety instructions booklet.

3.3 Scope of delivery, JP Booster

The box contains the following items:

- 1 Grundfos JP Booster
- 1 quick guide
- 1 safety instructions booklet.

4. Installation requirements

4.1 Location

The product can be installed both indoors and outdoors.

Please observe the following:

- Install the product to enable easy inspection, maintenance, and service.
- We recommend that you place the product as close as possible to the liquid to be pumped.
- We recommend that you install the product near a drain or in a drip tray connected to a drain in order to lead away possible condensation from cold surfaces.

Related information

4.3 Ambient temperature during operation

4.2 Installation of the product in a frosty environment

Protect the product from freezing if it is to be installed outdoors where frost may occur.

4.3 Ambient temperature during operation

Ambient temperature	
0-40 °C	The pump can run in continuous operation.
40-55 °C	The overheating protection ensures that the pump runs in intermittent operation when the air temperature is too high to cool the motor efficiently. Example of intermittent cycle: the pump runs for 20 minutes and stops for 40 minutes before starting again. See the table below.

Intermittent operation (S3 mode)		
40-55 °C	**50 Hz**	**60 Hz**
JP 3-42	ON: 20 min OFF: 40 min	ON: 20 min OFF: 40 min
JP 4-47	ON: 15 min OFF: 45 min	ON: 10 min OFF: 50 min
JP 4-54	ON: 20 min OFF: 40 min	ON: 20 min OFF: 40 min
JP 5-48	ON: 20 min OFF: 40 min	ON: 30 min OFF: 30 min

Related information

4.1 Location

4.4 Minimum space

Ensure sufficient space for service and maintenance and for motor cooling.

- We recommend a clearance of 0.5 m on three sides of the product.
- The motor is fan cooled, so do not block the fan cover.
- If you install the product with one side against a wall, make sure that the nameplate is visible.

5. Mechanical installation

WARNING
Electric shock
Death or serious personal injury
- Switch off the power supply before you start any work on the product. Make sure that the power supply cannot be switched on accidentally.

CAUTION
Crushing of feet
Minor or moderate personal injury
- Wear safety shoes when handling the product.

CAUTION
Impurities in the water
Minor or moderate personal injury
- Before the pump is used for supplying drinking water, flush the pump thoroughly with clean water.

5.3.1 Maximum system pressure

Make sure that the system in which the pump is installed is designed for the maximum pump pressure.

When installing a non-return valve in the plumbing system, make sure that the system has an expansion tank at the water heater and that the pressure-relief valve in the water heater is plumbed to a drain. Carry out the installation in accordance with local regulations.

The maximum inlet pressure depends on the head at the actual duty point. The sum of the inlet pressure and the head must not exceed the maximum system pressure.

We recommend installing a pressure-relief valve to protect the pump so that the outlet pressure does not exceed the maximum system pressure.

5.3.2 Inlet and outlet pipes

Please follow these general precautions when connecting the inlet and outlet pipes.

Do not let the pump support the pipes. Use pipe hangers or other supports at proper intervals to provide pipe support near the pump.

The internal diameter of the pipes must never be smaller than the diameter of the pump ports.

- Install the pipes so that air pockets are avoided, especially on the inlet side of the pump.
- Use eccentric reducers with the tapered side down.
- Make sure the pipes are as straight as possible to avoid unnecessary bends and fittings. We recommend long-radius 90° pipe bends to decrease friction loss.
- Run the inlet pipe as direct as possible and, ideally, make sure the length is at least ten times the pipe diameter.
- If possible, run a horizontal inlet line. We recommend a gradual upward slope for pumps operating in suction-lift conditions, and a gradual downward slope for pumps operating in positive inlet-pressure conditions.
- A short pipe must be of the same diameter as the inlet port or larger.
- A long pipe must be one or two sizes larger than the inlet port, depending on the length.

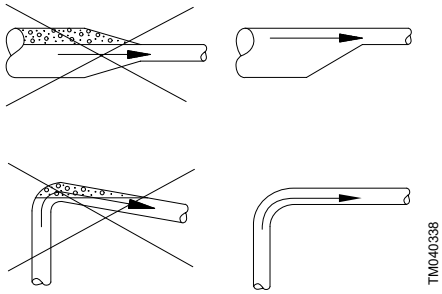

Recommended pipe installation to avoid friction and air pockets

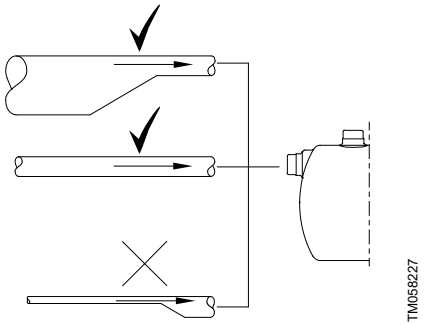

Correct pipe sizing for connection to the pump inlet or outlet

5.4 Installation examples

We recommend that you follow the installation examples.

Valves are not supplied with the pump.

5.4.1 Suction from a tank

This installation example shows JP PM, but it applies to all variants of the JP range.

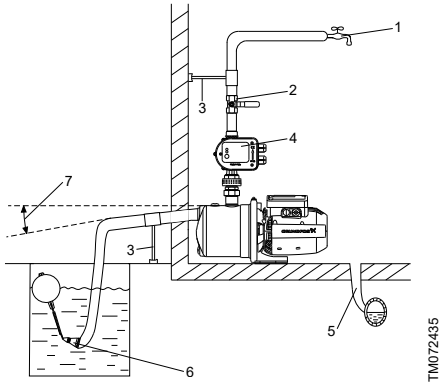

Pos.	Description
1	Highest tapping point.
2	Isolating valve.
3	Pipe support.
4	Pressure manager.
5	Drain to sewer.
6	Strainer. A foot valve is optional. We recommend using a foot valve together with JP PM.
7	5° angle.

5.4.2 Suction from a well

This installation example shows the JP PM, but it applies to all variants of the JP range.

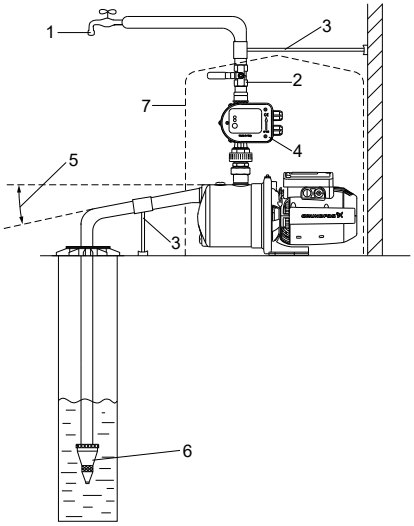

Pos.	Description
1	Highest tapping point.
2	Isolating valve.
3	Pipe support.
4	Pressure manager.
5	5° angle.
6	Foot valve with strainer. The foot valve is optional. We recommend using a foot valve together with JP PM.
7	Pump cover.

6. Electrical connection

WARNING
Electric shock
Death or serious personal injury

- Switch off the power supply before you start any work on the product. Make sure that the power supply cannot be switched on accidentally.

WARNING
Electric shock
Death or serious personal injury

- The product is supplied with a grounding conductor and grounding-type attachment plug. To reduce the risk of electric shock, be certain that the product is connected only to a properly grounded, grounding-type receptacle (protective earth).

WARNING
Electric shock
Death or serious personal injury

- If national legislation requires a residual-current device (RCD) or equivalent in the electrical installation, this must be type A or better.

WARNING
Electric shock
Death or serious personal injury

- If the product is used for cleaning or maintenance of swimming pools, garden ponds or similar places, make sure that the product is supplied through a residual-current device (RCD) with a rated residual operating current not exceeding 30 mA.

All electrical connections must be carried out by qualified persons in accordance with local regulations.

Make sure that the electrical installation supports the rated current [A] of the product. See the product's nameplate.

6.2 Wiring diagram, JP

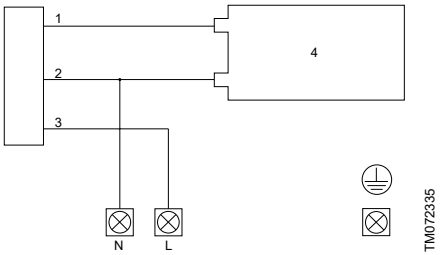

Pos.	Description
1	Red
2	Blue
3	Black
4	Capacitor

6.3 Motor protection

The pump incorporates current- and temperature-dependent motor protection. If the pump is running without water, is blocked or otherwise overloaded, the built-in thermal switch will cut out. When the motor has cooled sufficiently, it will restart automatically.

No external motor protection is required.

6.4 Electrical connection, PM START

6.4.1 Electrical connection

WARNING
Electric shock
Death or serious personal injury

- Switch off the power supply before you start any work on the product. Make sure that the power supply cannot be switched on accidentally.

WARNING
Electric shock
Death or serious personal injury

- Connect the product to protective earth and provide protection against indirect contact in accordance with local regulations.
- Power cables without a plug must be connected to a supply disconnecting device incorporated in the fixed wiring according to the local wiring rules.
- The installation must be fitted with a residual-current device (RCD) with a tripping current less than 30 mA.
- The pressure manager must be connected to an external mains switch with a contact gap of at least 3 mm in all poles.

All electrical connections must be carried out by qualified persons in accordance with local regulations.

The product can be powered by a generator or other alternative power supplies, provided that the requirements for the power supply are fulfilled.

Connect products delivered with a power plug using the supplied cable and plug.
Connect products with no fitted cable and plug according to the following instructions:

1. Remove the operating panel from the front of the product.

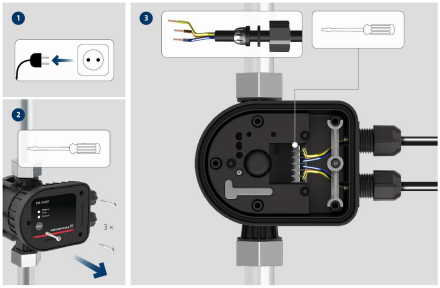

2. Make the electrical connection according to the wiring diagram.

3. Fit the operating panel securely with all four mounting screws to maintain enclosure class IP65.

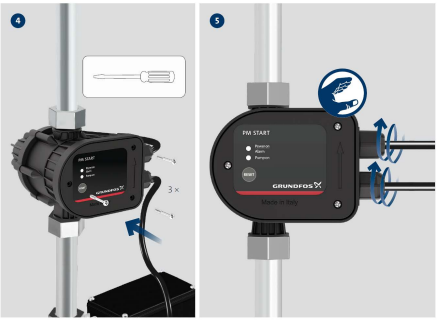

Pump model	Recommended cable type
JP 3-42 and JP 4-47	H05 RN-F
JP 4-54 and JP 5-48	H07 RN-F

6.4.2 Wiring diagrams

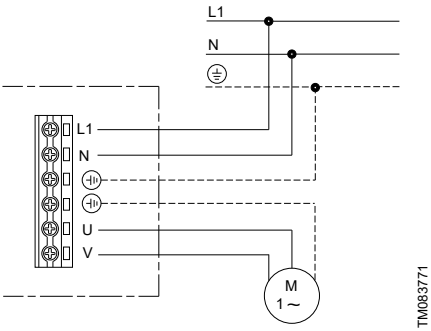

Wiring diagram for one-phase pumps

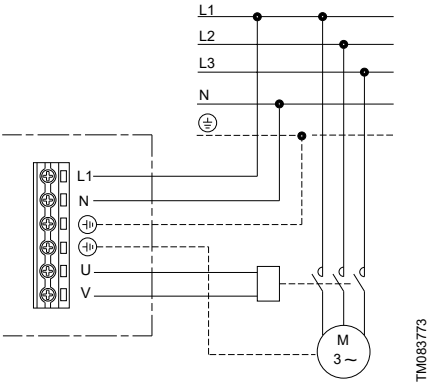

Wiring diagram for three-phase pumps

7. Startup of the product

WARNING
Electric shock
Death or serious personal injury
- Do not use the product for cleaning and other maintenance of swimming pools or similar places if there are people in the water.

CAUTION
Hot surface
Minor or moderate personal injury
- Use protective gloves if the liquid or ambient temperature is higher than 40 °C.

CAUTION
Hot surface
Minor or moderate personal injury
- Do not run the pump continuously with a closed inlet or outlet valve.

CAUTION
Hot or cold liquid
Minor or moderate personal injury
- Make sure that escaping hot or cold liquid does not cause injury to persons or damage to the equipment.

Do not turn on the power supply until the pump has been filled with liquid.

The number of starts and stops must not exceed 20 times per hour.

The pump must not run without delivering water for more than 5 minutes.

Only use the product for the intended use and for the pumped liquids stated in these installation and operating instructions.

Related information

2.3 Intended use

2.4 Pumped liquids

7.2.1 Startup of JP PM

For JP pumps with pressure manager, see the PM START quick guide for instructions on how to start the product.

QR92949257

http://net.grundfos.com/qr/i/98388184

If a pressure is not built up in the system within five minutes after startup, the dry-running protection will be activated and the pump will be stopped. Check the priming conditions of the pump before attempting to restart it.

7.2.2 Shaft seal run-in

The shaft seal faces are lubricated by the pumped liquid. A slight leakage from the shaft seal of up to 10 ml per day or 8 to 10 drops per hour may occur. Under normal conditions, the leaking liquid will evaporate. As a result, no leakage will be detected.

When the pump is started for the first time, or when the shaft seal has been replaced, a certain run-in period is required before the leakage is reduced to an acceptable level. The time required for this depends on the operating conditions, that is, every time the operating conditions change, a new run-in period will be started.

Leaking liquid will drain through the drain holes in the motor flange.

Install the product in such a way that leakage cannot cause undesirable collateral damage.

8. Service

WARNING
Electric shock
Death or serious personal injury

- Switch off the power supply before you start any work on the product. Make sure that the power supply cannot be switched on accidentally.

WARNING
Chemical hazard
Death or serious personal injury

- Make sure that the product has only been used for water. If the product has been used for pumping aggressive liquids, flush the system with clean water before you start work on the product.

WARNING
Biological hazard
Death or serious personal injury

- Make sure that the product has only been used for water. If the product has been used for pumping aggressive liquids, flush the system with clean water before you start work on the product.

WARNING
Pressurised system
Death or serious personal injury

- Before dismantling the pump, drain the system or close the isolating valves on both sides of the pump. Slowly loosen the drain plug and unpressurise the system.

CAUTION
Impurities in the water
Minor or moderate personal injury

- Before the pump is used for supplying drinking water, flush the pump thoroughly with clean water.
- Use spare parts approved by Grundfos.

Only qualified persons are allowed to service the pump.

8.1 Maintenance

The product is maintenance-free during normal operation. For cleaning, use a dry and dust-free cloth.

8.3 Service kits

For further information on service kits, see Grundfos Product Center at *www.product-selection.grundfos.com*.

9.3 Storage of the product

WARNING
Electric shock
Death or serious personal injury

- Switch off the power supply before you start any work on the product. Make sure that the power supply cannot be switched on accidentally.

If the product is to be stored for a period of time, for example during winter, drain it by removing the drain plug and store the product indoors in a dry location.

During storage the temperature must be between -40 and +70 ˚C and have a maximum relative humidity of 98 % RH.

Related information

- *[TOPIC NOT IN MAP (empty topicContent)]*
href=Taking-the-product-out-of-operation-(co)-WLQv-9k.dita

9.4 Frost protection

If the product is not used during periods of frost, it must be drained to avoid damage.

10. Fault finding the product

WARNING
Electric shock
Death or serious personal injury

- Switch off the power supply before you start any work on the product. Make sure that the power supply cannot be switched on accidentally.

WARNING
Chemical hazard
Death or serious personal injury

- Make sure that the product has only been used for water. If the product has been used for pumping aggressive liquids, flush the system with clean water before you start work on the product.

WARNING
Pressurised system
Death or serious personal injury

- Before dismantling the product, drain the system or close the isolating valves on both sides of the product. Slowly loosen the drain plug and unpressurise the system.

10.1 The pump does not start

Cause	Remedy
Supply failure.	• Cut in the circuit breaker or replace the fuses. If the new fuses also blow, check the electrical installation.
The pump is blocked by impurities.	1. Clean the pump. 2. Clean or replace the strainer in the inlet pipe.
The motor is defective.	• Replace the pump.

10.2 The pump stops unexpectedly during operation and starts again after a while

The thermal switch in the motor has tripped due to overheating and runs intermittent operation. The thermal switch will cut in automatically when the motor has cooled sufficiently. If the problem persists, check the possible causes:

Cause	Remedy
The impeller is stuck.	• Clean the pump.
The motor is defective.	• Replace the pump.
The ambient temperature is too high.	• Make sure the ambient temperature is below the maximum ambient temperature stated on the nameplate.

10.3 The pump runs, but does not deliver the expected amount of water

Cause	Remedy
The outlet pipe is blocked. In this case, the pump typically delivers a reduced quantity of water at a high pressure.	• Clean the pipe or open the isolating valves, if any.
The pump is not filled with water.	• Prime the pump.
The inlet pipe is blocked by impurities.	• Clean the inlet pipe. Clean or replace the strainer in the inlet pipe.
The pump is blocked by impurities.	• Clean the pump. Clean or replace the strainer in the inlet pipe.
The suction lift is too high.	• Change the position of the pump. The suction lift must not exceed 8 m.
The inlet pipe is too long.	• Change the position of the pump.
The diameter of the inlet pipe is too small.	• Replace the inlet pipe.
The inlet pipe is not immersed deeply enough.	• Make sure that the inlet pipe is immersed sufficiently.
The inlet pipe is leaking.	• Repair or replace the pipe.

10.4 Fault finding boosters with a pressure manager

10.4.1 Operating panel, PM START

PM START offers a user-friendly interface with indicator LEDs and a reset button.

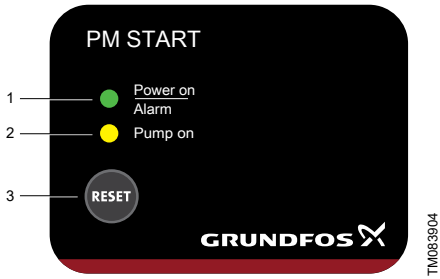

Pos.	Description	Function
1	**Power on**	The green indicator light is permanently on when the power is on.
	Alarm	The green indicator light flashes when there is an operating fault in the pump.
2	**Pump on**	The yellow indicator light is on when the pump is in operation.
3	**RESET**	The button is used for resetting fault indications.

10.4.2 The "Alarm" indicator light flashes once at a regular interval

For systems without a pressure tank.

The anti-cycling function has stopped the pump because the pump starts and stops too frequently.

Cause	Remedy
A tap has not been entirely closed after use.	• Make sure all taps are closed.
There is a minor leakage in the system.	• Make sure there are no leakages in the system.

10.4.3 The "Power on" indicator light is off even though the power supply has been switched on

Cause	Remedy
The fuses in the electrical installation have blown.	• Replace the fuses. If the new fuses also blow, check the electrical installation for malfunctions.
The earth-leakage circuit breaker or the voltage-operated circuit breaker has tripped.	• Cut in the circuit breaker.
The pressure manager is defective.	• Repair or replace the pressure manager. Find more information in the service instructions at *https://product-selection.grundfos.com*.

10.4.4 The "Pump on" indicator light is on, but the pump does not start

Cause	Remedy
The power supply to the pump is disconnected.	• Check the plug and cable connections, and make sure that the built-in circuit breaker of the pump is switched off.
The motor protection of the pump has tripped due to overload.	• Make sure the motor or pump is not blocked.
The pump is defective.	• Repair or replace the pump.
The pressure manager is defective.	• Repair or replace the pressure manager. Find more information in the service instructions at *https://product-selection.grundfos.com*

10.4.5 The pump does not start when water is consumed

The "Pump on" indicator light is off.

Cause	Remedy
There is too big a difference in height between the pressure manager and the tapping point.	• Adjust the installation, or increase the start pressure.
The pressure manager is defective.	• Repair or replace the pressure manager. Find more information in the service instructions at *https://product-selection.grundfos.com*.

10.4.6 The pump does not stop

Cause	Remedy
The pump cannot deliver the necessary outlet pressure.	• Replace the pump.
The start pressure is set too high.	• PM 1: The start pressure is factory set. Make sure that your product is dimensioned correctly. • PM 2, PM TWIN: Decrease the start pressure.
The non-return valve is stuck in open position.	• Clean or replace the non-return valve.
The pressure manager is defective.	• Repair or replace the pressure manager. Find more information in the service instructions at *https://product-selection.grundfos.com*.

10.5 Fault finding boosters with a pressure tank

10.5.1 The booster starts and stops too frequently

Cause	Remedy
Incorrect precharge pressure.	• Adjust the diaphragm tank pressure.
Leakage in pipes.	• Check and repair the pipes.
The diaphragm is broken. Water escapes if the air valve is pushed down.	• Replace the pressure tank.

10.6 Fault finding the pressure switch

10.6.1 The motor does not start

Cause	Remedy
Problem with the pressure switch	• Check that the pressure switch is live. Verify power at the switch terminals. • Ensure that the tank pre-loading pressure does not exceed the minimum value of the pressure switch. Set the pre-loading pressure at 0.2 bar below the minimum value of the pressure switch.

10.6.2 The motor does not stop when the demand for water has ceased

Cause	Remedy
Problem with the pressure switch	• Ensure that the value at which the pressure switch is set to stop the motor does not exceed the pressure the pump can generate (suction + delivery). Set the pressure switch at a lower pressure. • Check that the pressure switch contacts move freely. If not, change the pressure switch.

10.6.3 The pressure switch frequently starts and stops during normal water delivery

Cause	Remedy
Incorrect pressure switch setting	• Check the setting of the pressure switch. Increase the setting value incrementally until the problem is resolved. Do not forget to reset the minimum intervention pressure. • The pressure tank diaphragm is broken. Replace the pressure tank.

11. Technical data

11.1 Operating conditions

System pressure	Max. 6 bar / 0.60 MPa
Suction lift	Max. 8 m, including inlet-pipe pressure loss at a liquid temperature of 20 °C
Liquid temperature	S1 [1]: Max. 40 °C S3 [2]: Max. 60 °C
Ambient temperature	S1 [1]: 0-40 °C S3 [2]: 0-55 °C
Relative humidity	Max. 98 %
Enclosure class	IP44
Insulation class	F
Supply voltage	1 × 220-240 V, 50/60 Hz 1 × 115 V, 60 Hz
Start/stop frequency	Max. 20 per hour
Sound pressure level	Max. sound pressure level of the pump: JP 3-42: 68 dB(A) JP 4-47: 70 dB(A) JP 4-54: 74 dB(A) JP 5-48: 81 dB(A)

1) S1 mode: The pump runs continuously.

2) S3 mode: The pump runs in intermittent operation to cool down the motor.

11.2 Head and flow rate

Max. head	JP 3-42: 42 m JP 4-47: 47 m JP 4-54: 54 m JP 5-48: 48 m
Max. flow rate	JP 3-42: 3 m^3/h JP 4-47: 4 m^3/h JP 4-54: 4 m^3/h JP 5-48: 5 m^3/h

11.3 Inlet pressure

Max. inlet pressure	JP 3-42: 1.5 bar / 0.15 MPa JP 4-47: 1.0 bar / 0.10 MPa JP 4-54: 0.5 bar / 0.05 MPa JP 5-48: 1.0 bar / 0.10 MPa

11.4 Miscellaneous data

Cut-in pressure	Preset cut-in pressure (start pressure): JP PM: 1.5 bar JP PT-V: 2.2 bar JP PT-H: 2.2 bar
Min./max. storage temperature	-20/+70 °C

12. Disposing of the product

This product or parts of it must be disposed of in an environmentally sound way.

1. Use the public or private waste collection service.
2. If this is not possible, contact the nearest Grundfos company or service workshop.
3. Dispose of the waste battery through the national collective schemes. If in doubt, contact your local Grundfos company.

The crossed-out wheelie bin symbol on a product means that it must be disposed of separately from household waste. When a product marked with this symbol reaches its end of life, take it to a collection point designated by the local waste disposal authorities. The separate collection and recycling of such products will help protect the environment and human health.

See also end-of-life information at *www.grundfos.com/product-recycling*.

13. Document quality feedback

To provide feedback about this document, scan the QR code using your phone's camera or a QR code app.

Click here to submit your feedback

Argentina
Bombas GRUNDFOS de Argentina S.A.
Ruta Panamericana km. 37.500industin
1619 - Garín Pcia. de B.A.
Tel.: +54-3327 414 444
Fax: +54-3327 45 3190

Australia
GRUNDFOS Pumps Pty. Ltd.
P.O. Box 2040
Regency Park
South Australia 5942
Tel.: +61-8-8461-4611
Fax: +61-8-8340-0155

Austria
GRUNDFOS Pumpen Vertrieb
Ges.m.b.H.
Grundfosstraße 2
A-5082 Grödig/Salzburg
Tel.: +43-6246-883-0
Fax: +43-6246-883-30

Belgium
N.V. GRUNDFOS Bellux S.A.
Boomsesteenweg 81-83
B-2630 Aartselaar
Tel.: +32-3-870 7300
Fax: +32-3-870 7301

Bosnia and Herzegovina
GRUNDFOS Sarajevo
Zmaja od Bosne 7-7A
BiH-71000 Sarajevo
Tel.: +387 33 592 480
Fax: +387 33 590 465
www.ba.grundfos.com
E-mail: grundfos@bih.net.ba

Brazil
BOMBAS GRUNDFOS DO BRASIL
Av. Humberto de Alencar Castelo
Branco, 630
CEP 09850 - 300
São Bernardo do Campo - SP
Tel.: +55-11 4393 5533
Fax: +55-11 4343 5015

Bulgaria
Grundfos Bulgaria EOOD
Slatina District
Iztochna Tangenta street no. 100
BG - 1592 Sofia
Tel.: +359 2 49 22 200
Fax: +359 2 49 22 201
E-mail: bulgaria@grundfos.bg

Canada
GRUNDFOS Canada inc.
2941 Brighton Road
Oakville, Ontario
L6H 6C9
Tel.: +1-905 829 9533
Fax: +1-905 829 9512

China
GRUNDFOS Pumps (Shanghai) Co. Ltd.
10F The Hub, No. 33 Suhong Road
Minhang District
Shanghai 201106 PRC
Tel.: +86 21 612 252 22
Fax: +86 21 612 253 33

Colombia
GRUNDFOS Colombia S.A.S.
Km 1.5 vía Siberia-Cota Conj. Potrero
Chico,
Parque Empresarial Arcos de Cota Bod.
1A.
Cota, Cundinamarca
Tel.: +57(1)-2913444
Fax: +57(1)-8764586

Croatia
GRUNDFOS CROATIA d.o.o.
Buzinski prilaz 38, Buzin
HR-10010 Zagreb
Tel.: +385 1 6595 400
Fax: +385 1 6595 499
www.hr.grundfos.com

Czech Republic
GRUNDFOS Sales Czechia and Slovakia
s.r.o.
Čajkovského 21
779 00 Olomouc
Tel.: +420-585-716 111

Denmark
GRUNDFOS DK A/S
Martin Bachs Vej 3
DK-8850 Bjerringbro
Tel.: +45-87 50 50 50
Fax: +45-87 50 51 51
E-mail: info_GDK@grundfos.com
www.grundfos.com/DK

Estonia
GRUNDFOS Pumps Eesti OÜ
Peterburi tee 92G
11415 Tallinn
Tel.: + 372 606 1690
Fax: + 372 606 1691

Finland
OY GRUNDFOS Pumput AB
Trukkikuja 1
FI-01360 Vantaa
Tel.: +358-(0) 207 889 500

France
Pompes GRUNDFOS Distribution S.A.
Parc d'Activités de Chesnes
57, rue de Malacombe
F-38290 St. Quentin Fallavier (Lyon)
Tel.: +33-4 74 82 15 15
Fax: +33-4 74 94 10 51

Germany
GRUNDFOS GMBH
Schlüterstr. 33
40699 Erkrath
Tel.: +49-(0) 211 929 69-0
Fax: +49-(0) 211 929 69-3799
E-mail: infoservice@grundfos.de
Service in Deutschland:
kundendienst@grundfos.de

Greece
GRUNDFOS Hellas A.E.B.E.
20th km. Athinon-Markopoulou Av.
P.O. Box 71
GR-19002 Peania
Tel.: +0030-210-66 83 400
Fax: +0030-210-66 46 273

Hong Kong
GRUNDFOS Pumps (Hong Kong) Ltd.
Unit 1, Ground floor, Siu Wai industrial
Centre
29-33 Wing Hong Street & 68 King Lam
Street, Cheung Sha Wan
Kowloon
Tel.: +852-27861706 / 27861741
Fax: +852-27858664

Hungary
GRUNDFOS South East Europe Kft.
Tópark u. 8
H-2045 Törökbálint
Tel.: +36-23 511 110
Fax: +36-23 511 111

India
GRUNDFOS Pumps India Private
Limited
118 Old Mahabalipuram Road
Thoraipakkam
Chennai 600 097
Tel.: +91-44 2496 6800

Indonesia
PT GRUNDFOS Pompa
Graha intirub Lt. 2 & 3
Jln. Cililitan Besar No.454. Makasar,
Jakarta Timur
ID-Jakarta 13650
Tel.: +62 21-469-51900
Fax: +62 21-460 6910 / 460 6901

Ireland
GRUNDFOS (Ireland) Ltd.
Unit A, Merrywell Business Park
Ballymount Road Lower
Dublin 12
Tel.: +353-1-4089 800
Fax: +353-1-4089 830

Italy
GRUNDFOS Pompe Italia S.r.l.
Via Gran Sasso 4
I-20060 Truccazzano (Milano)
Tel.: +39-02-95838112
Fax: +39-02-95309290 / 95838461

Japan
GRUNDFOS Pumps K.K.
1-2-3, Shin-Miyakoda, Kita-ku
Hamamatsu
431-2103 Japan
Tel.: +81 53 428 4760
Fax: +81 53 428 5005

Kazakhstan
Grundfos Kazakhstan LLP
7' Kyz-Zhibek Str., Kok-Tobe micr.
KZ-050020 Almaty Kazakhstan
Tel.: +7 (727) 227-98-55/56

Korea
GRUNDFOS Pumps Korea Ltd.
6th Floor, Aju Building 679-5
Yeoksam-dong, Kangnam-ku, 135-916
Seoul, Korea
Tel.: +82-2-5317 600
Fax: +82-2-5633 725

Latvia
SIA GRUNDFOS Pumps Latvia
Deglava biznesa centrs
Augusta Deglava ielā 60
LV-1035, Rīga,
Tel.: + 371 714 9640, 7 149 641
Fax: + 371 914 9646

Lithuania
GRUNDFOS Pumps UAB
Smolensko g. 6
LT-03201 Vilnius
Tel.: + 370 52 395 430
Fax: + 370 52 395 431

Malaysia
GRUNDFOS Pumps Sdn. Bhd.
7 Jalan Peguam U1/25
Glenmarie industrial Park
40150 Shah Alam, Selangor
Tel.: +60-3-5569 2922
Fax: +60-3-5569 2866

Mexico
Bombas GRUNDFOS de México
S.A. de C.V.
Boulevard TLC No. 15
Parque industrial Stiva Aeropuerto
Apodaca, N.L. 66600
Tel.: +52-81-8144 4000
Fax: +52-81-8144 4010

Netherlands
GRUNDFOS Netherlands
Veluwezoom 35
1326 AE Almere
Postbus 22015
1302 CA ALMERE
Tel.: +31-88-478 6336
Fax: +31-88-478 6332
E-mail: info_gnl@grundfos.com

New Zealand
GRUNDFOS Pumps NZ Ltd.
17 Beatrice Tinsley Crescent
North Harbour Industrial Estate
Albany, Auckland
Tel.: +64-9-415 3240
Fax: +64-9-415 3250

Norway
GRUNDFOS Pumper A/S
Strømsveien 344
Postboks 235, Leirdal
N-1011 Oslo
Tel.: +47-22 90 47 00
Fax: +47-22 32 21 50

Poland
GRUNDFOS Pompy Sp. z o.o.
ul. Klonowa 23
Baranowo k. Poznania
PL-62-081 Przeźmierowo
Tel.: (+48-61) 650 13 00
Fax: (+48-61) 650 13 50

Portugal
Bombas GRUNDFOS Portugal, S.A.
Rua Calvet de Magalhães, 241
Apartado 1079
P-2770-153 Paço de Arcos
Tel.: +351-21-440 76 00
Fax: +351-21-440 76 90

Romania
GRUNDFOS Pompe România SRL
S-PARK BUSINESS CENTER, Clădirea A2, etaj 2
Str. Tipografilor, Nr. 11-15, Sector 1, Cod 013714
Bucuresti, Romania
Tel.: 004 021 2004 100
E-mail: romania@grundfos.ro

Serbia
Grundfos Srbija d.o.o.
Omladinskih brigada 90b
11070 Novi Beograd
Tel.: +381 11 2258 740
Fax: +381 11 2281 769
www.rs.grundfos.com

Singapore
GRUNDFOS (Singapore) Pte. Ltd.
25 Jalan Tukang
Singapore 619264
Tel.: +65-6681 9688
Faxax: +65-6681 9689

Slovakia
GRUNDFOS s.r.o.
Prievozská 4D 821 09 BRATISLAVA
Tel.: +421 2 5020 1426
sk.grundfos.com

Slovenia
GRUNDFOS LJUBLJANA, d.o.o.
Leskoškova 9e, 1122 Ljubljana
Tel.: +386 (0) 1 568 06 10
Fax: +386 (0)1 568 06 19
E-mail: tehnika-si@grundfos.com

South Africa
GRUNDFOS (PTY) LTD
16 Lascelles Drive, Meadowbrook Estate
1609 Germiston, Johannesburg
Tel.: (+27) 10 248 6000
Fax: (+27) 10 248 6002
E-mail: lgradidge@grundfos.com

Spain
Bombas GRUNDFOS España S.A.
Camino de la Fuentecilla, s/n
E-28110 Algete (Madrid)
Tel.: +34-91-848 8800
Fax: +34-91-628 0465

Sweden
GRUNDFOS AB
Box 333 (Lunnagårdsgatan 6)
431 24 Mölndal
Tel.: +46 31 332 23 000
Fax: +46 31 331 94 60

Switzerland
GRUNDFOS Pumpen AG
Bruggacherstrasse 10
CH-8117 Fällanden/ZH
Tel.: +41-44-806 8111
Fax: +41-44-806 8115

Taiwan
GRUNDFOS Pumps (Taiwan) Ltd.
7 Floor, 219 Min-Chuan Road
Taichung, Taiwan, R.O.C.
Tel.: +886-4-2305 0868
Fax: +886-4-2305 0878

Thailand
GRUNDFOS (Thailand) Ltd.
92 Chaloem Phrakiat Rama 9 Road
Dokmai, Pravej, Bangkok 10250
Tel.: +66-2-725 8999
Fax: +66-2-725 8998

Turkey
GRUNDFOS POMPA San. ve Tic. Ltd. Sti.
Gebze Organize Sanayi Bölgesi
Ihsan dede Caddesi
2. yol 200. Sokak No. 204
41490 Gebze/ Kocaeli
Tel.: +90 - 262-679 7979
Fax: +90 - 262-679 7905
E-mail: satis@grundfos.com

Ukraine
ТОВ "ГРУНДФОС УКРАЇНА"
Бізнес Центр Європа
Столичне шосе, 103
м. Київ, 03131, Україна
Tel.: (+38 044) 237 04 00
Fax: (+38 044) 237 04 01
E-mail: ukraine@grundfos.com

United Arab Emirates
GRUNDFOS Gulf Distribution
P.O. Box 16768
Jebel Ali Free Zone, Dubai
Tel.: +971 4 8815 166
Fax: +971 4 8815 136

United Kingdom
GRUNDFOS Pumps Ltd.
Grovebury Road
Leighton Buzzard/Beds. LU7 4TL
Tel.: +44-1525-850000
Fax: +44-1525-850011

U.S.A.
Global Headquarters for WU
856 Koomey Road
Brookshire, Texas 77423 USA
Phone: +1-630-236-5500

Uzbekistan
Grundfos Tashkent, Uzbekistan
The Representative Office of Grundfos Kazakhstan in Uzbekistan
38a, Oybek street, Tashkent
Tel.: (+998) 71 150 3290 / 71 150 3291
Fax: (+998) 71 150 3292

Trademarks displayed in this material, including but not limited to Grundfos and the Grundfos logo, are registered trademarks owned by The Grundfos Group. © 2025 Grundfos Holding A/S, all rights reserved.

99520338 **03.2025**

ECM: 1415658