SCALA2

Installation and operating instructions

GRUNDFOS

SCALA2

English (GB)
Installation and operating instructions 5

Български (BG)
Упътване за монтаж и експлоатация. 26

Čeština (CZ)
Montážní a provozní návod 48

Deutsch (DE)
Montage- und Betriebsanleitung 69

Dansk (DK)
Monterings- og driftsinstruktion 91

Eesti (EE)
Paigaldus- ja kasutusjuhend 112

Español (ES)
Instrucciones de instalación y funcionamiento 133

Suomi (FI)
Asennus- ja käyttöohjeet 155

Français (FR)
Notice d'installation et de fonctionnement 176

Ελληνικά (GR)
Οδηγίες εγκατάστασης και λειτουργίας. 197

Hrvatski (HR)
Montažne i pogonske upute 219

Magyar (HU)
Telepítési és üzemeltetési utasítás. 240

Italiano (IT)
Istruzioni di installazione e funzionamento 261

Lietuviškai (LT)
Įrengimo ir naudojimo instrukcija 282

Latviešu (LV)
Uzstādīšanas un ekspluatācijas instrukcija 303

Nederlands (NL)
Installatie- en bedieningsinstructies 324

Polski (PL)
Instrukcja montażu i eksploatacji 345

Português (PT)
Instruções de instalação e funcionamento 366

Română (RO)
Instrucţiuni de instalare şi utilizare 388

Srpski (RS)
Uputstvo za instalaciju i rad 409

Svenska (SE)
Monterings- och driftsinstruktion. 430

Slovensko (SI)
Navodila za montažo in obratovanje 451

Slovenčina (SK)
Návod na montáž a prevádzku. 472

Türkçe (TR)
Montaj ve kullanım kılavuzu 493

Українська (UA)
Інструкції з монтажу та експлуатації 514

中文 (CN)
安装和使用说明书 537

日本語 (JP)
取扱説明書 558

한국어 (KO)
설치 및 작동 지침 579

Bosanski (BS)
Montažne i pogonske upute 600

Bahasa Indonesia (ID)
Petunjuk pengoperasian dan pemasangan 621

Macedonian (MK)
Упатства за монтирање и ракување 642

Malaysia (MY)
Cara pemasangan dan pengendalian 665

Norsk (NO)
Installasjons- og driftsinstruksjoner 686

(AR) العربية
تعليمات التركيب و التشغيل 707

ไทย (TH)
คำแนะนำในการติดตั้งและการใช้งาน 728

Tiếng Việt (VI)
Hướng dẫn lắp đặt và vận hành 749

Íslenska (IS)
Uppsetningar- og notkunarleiðbeiningar 770

Français (CA)
Notice d'installation et de fonctionnement 791

Español (MX)
Instrucciones de instalación y operación 814

Original installation and operating instructions

Table of contents

1. General information . . . 5
1.1 Hazard statements . . . 5
1.2 Notes . . . 5
1.3 Target group . . . 6

2. Product introduction . . . 6
2.1 Product description . . . 6
2.2 Intended use . . . 6
2.3 Pumped liquids . . . 6
2.4 Identification . . . 7

3. Receiving the product . . . 8
3.1 Inspecting the product . . . 8
3.2 Scope of delivery . . . 8

4. Installation requirements . . . 8
4.1 Location . . . 8
4.2 System sizing . . . 8

5. Mechanical installation . . . 8
5.1 Positioning the product . . . 8
5.2 Foundation . . . 9
5.3 Connecting the piping system . . . 9
5.4 How to reduce noise in the installation . . . 9
5.5 Locking pin . . . 10
5.6 Installation examples . . . 10

6. Electrical connection . . . 13
6.1 Motor protection . . . 13
6.2 Plug connection . . . 13
6.3 Connection without plug . . . 13

7. Starting up the product . . . 13
7.1 Priming the pump . . . 13
7.2 Starting the pump . . . 13
7.3 Pressure setting . . . 14
7.4 Shaft seal run-in . . . 14

8. Handling and storing the product . . . 15
8.1 Handling the product . . . 15
8.2 Storing the product . . . 15

9. Control functions . . . 15
9.1 Menu overview, SCALA2 . . . 15

10. Setting the product . . . 17
10.1 Setting the outlet pressure . . . 17
10.2 Locking and unlocking the operating panel . . . 17
10.3 Expert settings, SCALA2 . . . 17
10.4 Resetting to factory settings . . . 18

11. Servicing the product . . . 19
11.1 Maintaining the product . . . 19
11.2 Customer service information . . . 19
11.3 Service kits . . . 19

12. Starting up the product after standstill . . . 20
12.1 Deblocking the pump . . . 20

13. Taking the product out of operation . . . 20

14. Fault finding . . . 21
14.1 Grundfos Eye operating indications . . . 21
14.2 Fault resetting . . . 21
14.3 Fault finding chart . . . 22

15. Technical data . . . 24
15.1 Operating conditions . . . 24
15.2 Mechanical data . . . 24
15.3 Electrical data . . . 24
15.4 Dimensions and weights . . . 25

16. Disposing of the product . . . 25

1. General information

This appliance can be used by children aged from 8 years and above and persons with reduced physical, sensory or mental capabilities or lack of experience and knowledge if they have been given supervision or instruction concerning use of the appliance in a safe way and understand the hazards involved.

Children shall not play with the appliance. Cleaning and user maintenance shall not be made by children without supervision.

Read this document before you install the product. Installation and operation must comply with local regulations and accepted codes of good practice.

1.1 Hazard statements

The symbols and hazard statements below may appear in Grundfos installation and operating instructions, safety instructions and service instructions.

DANGER
Indicates a hazardous situation which, if not avoided, will result in death or serious personal injury.

WARNING
Indicates a hazardous situation which, if not avoided, could result in death or serious personal injury.

CAUTION
Indicates a hazardous situation which, if not avoided, could result in minor or moderate personal injury.

The hazard statements are structured in the following way:

SIGNAL WORD
Description of the hazard
Consequence of ignoring the warning

- Action to avoid the hazard.

1.2 Notes

The symbols and notes below may appear in Grundfos installation and operating instructions, safety instructions and service instructions.

Observe these instructions for explosion-proof products.

A blue or grey circle with a white graphical symbol indicates that an action must be taken.

A red or grey circle with a diagonal bar, possibly with a black graphical symbol, indicates that an action must not be taken or must be stopped.

If these instructions are not observed, it may result in malfunction or damage to the equipment.

Tips and advice that make the work easier.

1.3 Target group

These installation and operating instructions are intended for professional as well as non-professional users.

2. Product introduction

2.1 Product description

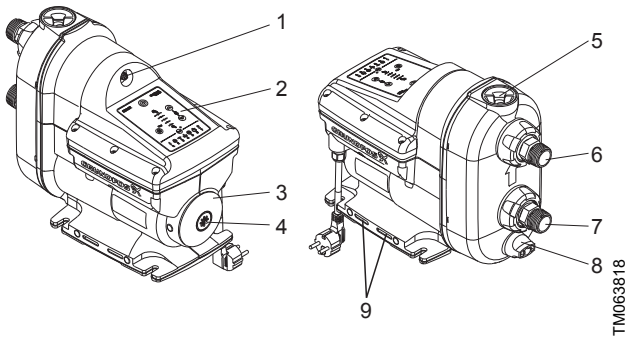

Grundfos SCALA2 pump

Pos.	Description
1	Air valve for built-in pressure tank
2	Operating panel. See section Control functions.
3	Nameplate. See section Nameplate.
4	Plug for access to pump shaft. See section Deblocking the pump.
5	Priming plug. See section Priming the pump.
6	Outlet opening. See section Connecting the piping system.
7	Inlet opening. See section Connecting the piping system.
8	Drain plug. See section Identification.
9	Ventilation holes. They must not be flooded.

The inlet and outlet openings include flexible connections of ± 5 °.

Related information

2.4.1 Nameplate
5.3 Connecting the piping system
7.1 Priming the pump
12.1 Deblocking the pump

2.2 Intended use

! This pump has been evaluated for use with water only.
Only use SCALA2 pumps according to the specifications stated in these installation and operating instructions.

The pump is suitable for pressure boosting of fresh water in domestic water supply systems.

2.3 Pumped liquids

The pump is designed for fresh water with a maximum chloride content of 300 ppm and a free chlorine content below 1 ppm.

The pump is not suitable for these liquids:

- liquids containing long fibres
- flammable liquids (oil, petrol, etc.)
- aggressive liquids.

! If the water can contain sand, gravel or other debris, there is a risk of pump blockage.
Install a filter on the inlet side or apply a floating strainer to protect the pump.

2.4 Identification

2.4.1 Nameplate

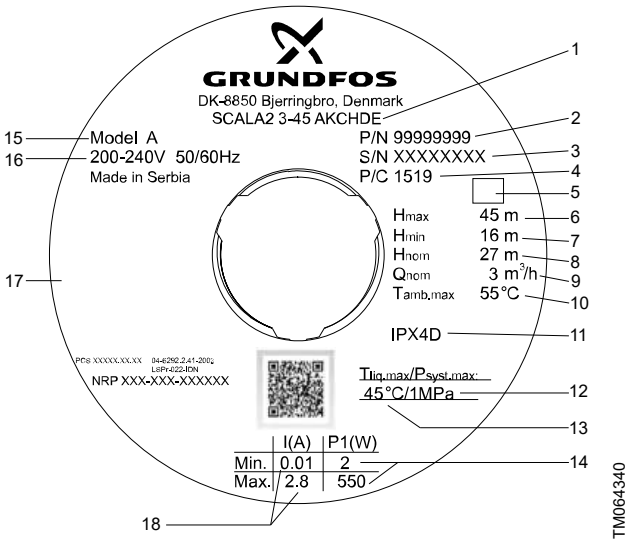

Example of nameplate

Pos.	Description
1	Type designation
2	Product number
3	Serial number
4	Production code (year and week)
5	Barcode
6	Max. head
7	Min. head
8	Rated head
9	Rated flow rate
10	Max. ambient temperature
11	Enclosure class
12	Max. operating pressure
13	Max. liquid temperature
14	Min. and max. rated power
15	Model
16	Voltage and frequency
17	Approvals
18	Min. and max. rated current

2.4.2 Type key

Example: SCALA2.3-.45.A.1 x 200-240 V.50/60 Hz.C.H.D.E

Code	Explanation	Designation
SCALA2		Type range
3		Rated flow rate [m^3/h]
45		Max. head [m]
A	Standard	Material code
1 x 200-240 V, 50/60 Hz		Supply voltage
1 x 208-230 V, 60 Hz		
1 x 115 V, 60 Hz		
1 x 100-115 V, 50/60 Hz		
C	High-efficiency motor with frequency converter	Motor
A	Cable with plug, IEC type I, AS/NZS3112, 2 m	Mains cable and plug
B	Cable with plug, IEC type B, NEMA 5-15P, 6 ft	
C	Cable with plug, IEC type E&F, CEE7/7, 2 m	
D	Cable without plug, 2 m	
G	Cable with plug, IEC type G, BS1363, 2 m	
H	Cable with plug, IEC type I, IRAM 2073, 2 m	
J	Cable with plug, NEMA 6-15P, 6 ft	
K	Cable with plug, IEC type B, JIS C 8302, 2 m	
L	Cable with plug, IEC type L, CEI 23-16/VII, 2 m	
O	Cable with plug, IEC type O, TIS 166-2549, 2 m	
P	Cable with plug, IEC type D/M, IS 1293, 2 m	
D	Integrated frequency converter	Controller
E	R 1" composite material	Thread
F	NPT 1" composite material	

3. Receiving the product

3.1 Inspecting the product

Check that the product received is in accordance with the order.

Check that the voltage and frequency of the product match the voltage and frequency of the installation site.

Related information

2.4.1 Nameplate

3.2 Scope of delivery

The box contains the following items:

- 1 Grundfos SCALA2 pump
- 1 quick guide
- 1 safety instructions booklet
- 1 quick guide for locking pin (only for versions with locking pin).

4. Installation requirements

4.1 Location

The pump can be installed indoors or outdoors, but it must not be exposed to frost.

We recommend that you install the pump near a drain or in a drip tray connected to a drain in order to lead away possible condensation from cold surfaces.

The product must be installed in a well-ventilated room to ensure cooling of its components.

The installation location must be protected from rain, humidity, condensation, direct sunlight and dust.

The relative air humidity must not exceed 95 %.

Install the pump in such a way that no undesirable collateral damage can arise due to leakage.

If the unlikely event of an internal leakage occurs, the liquid will be drained through the bottom of the pump.

4.1.1 Minimum space

The pump requires a minimum space of 430 x 215 x 325 mm (17 x 8.5 x 12.8 inches).

Even though the pump does not require much space, we recommend that you leave enough space for service and maintenance access.

4.1.2 Installation of the product in a frosty environment

Protect the product from freezing if it is to be installed outdoors where frost may occur.

4.2 System sizing

Make sure that the system in which the pump is incorporated is designed for the maximum pump pressure.

The pump is factory-set to 3 bar (44 psi) outlet pressure which can be adjusted according to the system in which it is incorporated.

The tank precharge pressure is 1.25 bar (18 psi).

In case of suction lift of more than six metres, the pipe resistance on the outlet side must be at least two metres water column or 3 psi at any given flow in order to obtain optimum operation.

4.2.1 Maximum system pressure

Make sure that the system in which the pump is installed is designed for the maximum pump pressure.

When installing a non-return valve in the plumbing system, make sure that the system has an expansion tank at the water heater and that the pressure-relief valve in the water heater is plumbed to a drain. Carry out the installation in accordance with local regulations.

The maximum inlet pressure depends on the head at the actual duty point. The sum of the inlet pressure and the head must not exceed the maximum system pressure.

We recommend installing a pressure-relief valve to protect the pump so that the outlet pressure does not exceed the maximum system pressure.

5. Mechanical installation

DANGER
Electric shock
Death or serious personal injury

- Switch off the power supply before you start any work on the product.Make sure that the power supply cannot be switched on accidentally.

5.1 Positioning the product

Always mount the pump on the base plate in a horizontal position with a maximum inclination angle of ± 5 °.

5.2 Foundation

Fasten the pump to a solid horizontal foundation by means of screws through the holes in the base plate. See the figures below.

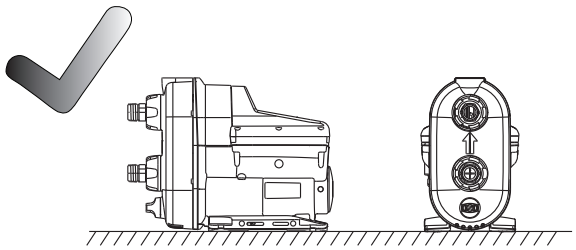

Horizontal foundation

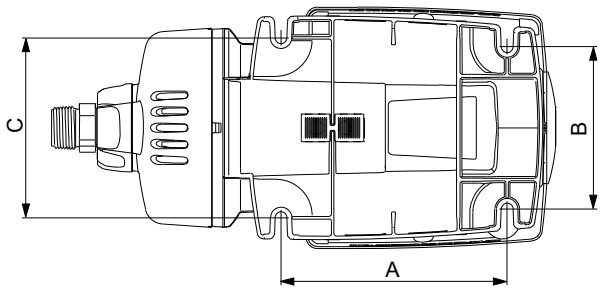

Base plate

	[mm (inch)]
A	181 (7.13)
B	130 (5.12)
C	144 (5.67)

5.3 Connecting the piping system

Make sure that the pump is not stressed by the piping system.

Always loosen and tighten the union nuts on the inlet and outlet ports by hand. Damage to the inlet and outlet parts increases the risk of leakage.

1. Turn the union nuts by hand to loosen the inlet and outlet ports. See the figure below.
2. Seal the pipe fittings with thread sealing tape.
3. Carefully screw the inlet and outlet connections to the pipe fittings using a pipe wrench or similar tool. Keep the union nut on the pipe fitting if you have removed it from the pump. The pump is equipped with flexible connections, ± 5 °, to facilitate the connection of inlet and outlet pipes.
4. Fasten the connections to the inlet and outlet. Hold the connection with one hand and tighten the union nut with the other hand.

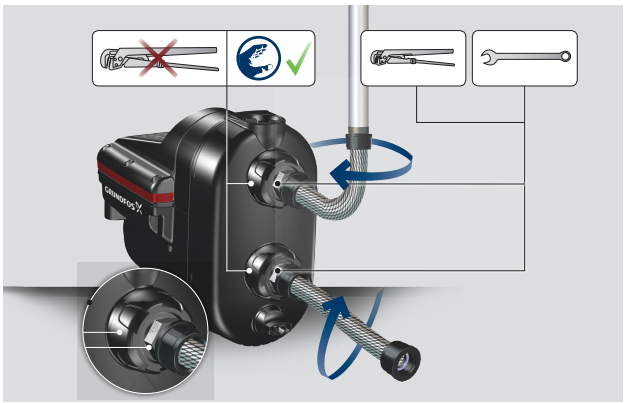

How to fit the connections

Pos.	Description
1	Inlet and outlet port
2	Union nut
3	Pipe fitting

5.4 How to reduce noise in the installation

We recommend to use flexible hoses and mount the pump on a vibration-damping rubber pad.

Vibrations from the pump may be transferred to the surrounding structure and create noise in the 20-1000 Hz spectrum, also called the bass spectrum.

Correct installation using a vibration-damping rubber pad, flexible hoses and correctly placed pipe hangers for rigid pipes can reduce the noise experienced by up to 50 %. See the figure below.

Place pipe hangers for the rigid pipes close to the connection of the flexible hose.

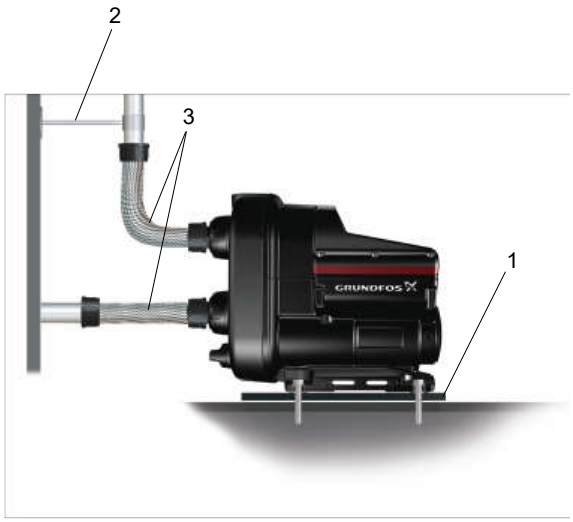

How to reduce noise in the installation

Pos.	Description
1	Rubber pad
2	Pipe hanger for rigid pipe
3	Flexible hose

5.5 Locking pin

The pump may produce a clicking noise if there is positive pressure at the inlet of the pump. In this case, you can mount a locking pin to avoid this noise. When a locking pin is mounted, the self-priming function is not applicable.

If the pump has a negative pressure at the inlet, removing the locking pin is necessary to enable the self-priming function.

5.5.1 Mounting the locking pin

To mount the locking pin, proceed as follows:

1. Turn off the pump.
2. Close the inlet and outlet valves to the pump to avoid backflow.
3. Loosen and remove the drain plug.
4. Insert the locking pin.

TM1040380

5. Mount and tighten the drain plug.
6. Open the inlet and outlet valves and turn on the pump.
7. If necessary, prime the pump.

5.5.2 Removing the locking pin

To remove the locking pin, proceed as follows:

1. Turn off the pump.
2. Close the inlet and outlet valves to the pump to avoid backflow.
3. Loosen and remove the drain plug.
4. Remove the locking pin with a small plier.

TM1040381

5. Mount and tighten the drain plug.
6. Open the inlet and outlet valves and turn on the pump.

5.6 Installation examples

Fittings, hoses and valves are not supplied with the pump.

We recommend to follow the installation examples in sections Mains water pressure boosting to Suction from freshwater tank.

! All installations must be carried out in accordance with local regulations.

Related information

5.6.1 Mains water pressure boosting
5.6.2 Suction from a well
5.6.3 Suction from freshwater tank
5.6.4 Inlet pipe length

5.6.1 Mains water pressure boosting

! In some countries, boosting from the city water mains is prohibited. Please follow local regulations regarding this application.

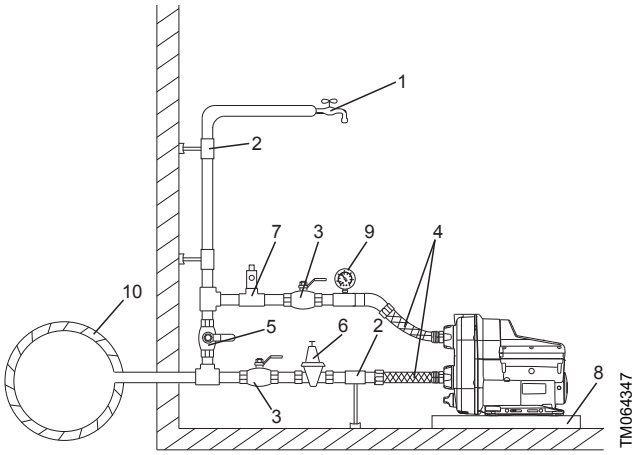

Mains water pressure boosting, SCALA2

Pos.	Description
1	Highest tapping point
2	Pipe hangers and supports
3	Isolating valves
4	Flexible hoses
5	Bypass valve
6	Optional pressure-reducing valve on the inlet side if the pressure can exceed 10 bar (145 psi).
7	Optional pressure-relief valve on the outlet side if the installation cannot withstand a pressure of 6 bar (87 psi).
8	Drip tray. Install the pump on a small stand to prevent the ventilation holes from being flooded.
9	Pressure gauge
10	Mains water pipe

5.6.2 Suction from a well

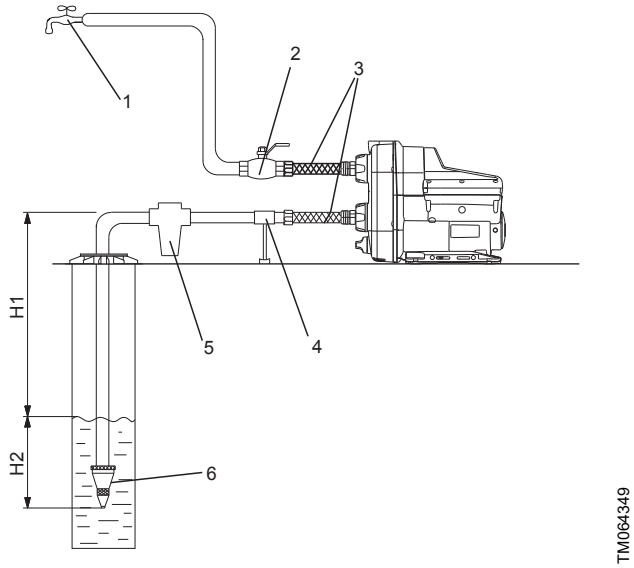

Suction from a well

Pos.	Description
1	Highest tapping point
2	Isolating valve
3	Flexible hoses
4	Pipe support
5	Inlet filter. If the water may contain sand, gravel or other debris, please install a filter on the inlet side to protect the pump and installation.
6	Foot valve with strainer (recommended).
H1	Maximum suction lift is 8 m (26 ft).
H2	Inlet pipe must be submersed at least 0.5 m (1.64 ft).

5.6.3 Suction from freshwater tank

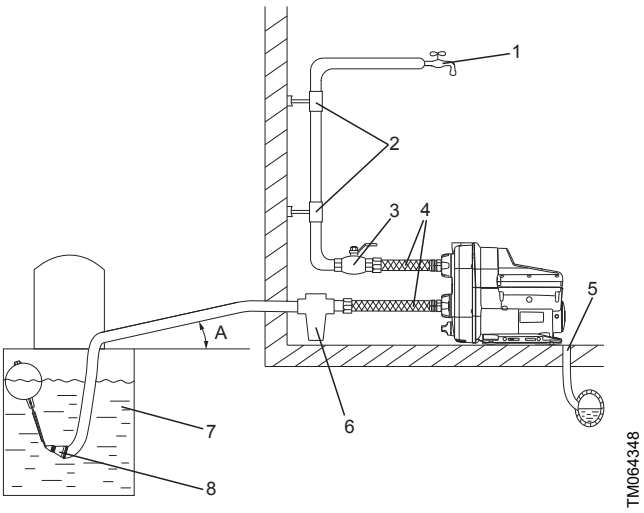

Suction from freshwater tank

Pos.	Description
1	Highest tapping point
2	Pipe hangers
3	Isolating valve
4	Flexible hoses
5	Drain to sewer
6	Inlet filter. If the water may contain sand, gravel or other debris, please install a filter on the inlet side to protect the pump and installation.
7	Freshwater tank
8	Foot valve with strainer (recommended)
A	Minimum 1° inclination

5.6.4 Inlet pipe length

The overview below shows the different possible inlet pipe lengths, depending on the vertical pipe length.

The overview is only intended as a guide.

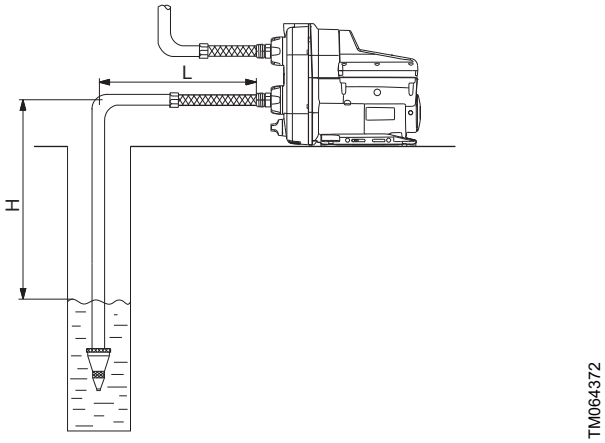

Inlet pipe length

DN 32		DN 40	
H [m (ft)]	L [m (ft)]	H [m (ft)]	L [m (ft)]
0 (0)	68 (223)	0 (0)	207 (679)
3 (10)	43 (141)	3 (10)	129 (423)
6 (20)	17 (56)	6 (20)	52 (171)
7 (23)	9 (30)	7 (23)	26 (85)
8 (26)	0 (0)	8 (26)	0 (0)

Preconditions:

Maximum flow velocity	1 l/s (16 gpm)
Inside roughness of pipes	0.01 mm (0.0004 inch)

Size	Inside pipe diameter [mm (inch)]	Pressure loss [mm (psi/ft)]
DN 32	28 (1.1)	0.117 (5/100)
DN 40	35.2 (1.4)	0.0387 (1.6/100)

6. Electrical connection

Carry out the electrical connection according to local regulations.

Check that the supply voltage and frequency correspond to the values stated on the nameplate.

DANGER
Electric shock
Death or serious personal injury
- Switch off the power supply before you start any work on the product. Make sure that the power supply cannot be switched on accidentally.

DANGER
Electric shock
Death or serious personal injury
- The pump must be earthed.
- The pump is supplied with a grounding conductor and grounding-type attachment plug. To reduce the risk of electric shock, be certain that the pump is connected only to a properly grounded, grounding type receptacle (protective earthing).
- If national legislation requires a Residual Current Device (RCD), a Ground Fault Circuit Interrupter (GFCI), or equivalent in the electrical installation, this must be type B (according to UL/IEC 61800-5-1) or better, due to the nature of the constant DC leakage current.

If the power supply cable is damaged, it must be replaced by the manufacturer, his service agent or similarly qualified persons in order to avoid hazard.

We recommend that you fit the permanent installation with a residual-current circuit breaker (RCCB) with a tripping current less than 30 mA.

6.1 Motor protection

The pump incorporates current and temperature dependent motor protection.

6.2 Plug connection

DANGER
Electric shock
Death or serious personal injury
- Check that the power plug delivered with the product is in compliance with local regulations.
- Make sure that the pump is connected only to a properly grounded, grounding-type receptacle (protective earthing).
- The protective earth of the power outlet must be connected to the protective earth of the pump. The plug must therefore have the same PE connection system as the power outlet. If not, use a suitable adapter.

6.3 Connection without plug

The electrical connection must be carried out by an authorised electrician in accordance with local regulations.

DANGER
Electric shock
Death or serious personal injury
- The pump must be connected to an external main switch with a minimum contact gap of 3 mm (0.12 inch) in all poles.

7. Starting up the product

Do not start the pump until it has been filled with liquid.

7.1 Priming the pump

1. Unscrew the priming plug and pour minimum 1.7 litres (0.45 gallons) of water into the pump housing. See fig. Priming the pump.
2. Screw the priming plug on again.

If the suction depth exceeds 6 m (20 ft), it may be necessary to prime the pump more than once.

Always tighten priming and drain plugs by hand.

Related information

7.2 Starting the pump

7.2 Starting the pump

1. Open a tap to prepare the pump for venting.
2. Insert the power plug into the socket or turn on the power supply and the pump will start.
3. When water flows without air, close the tap.
4. Open the highest tapping point in the installation, preferably a shower.
5. Adjust the pressure setpoint to the required pressure by means of the ⌃ ⌄ buttons.
6. Close the tapping point.

Startup has been completed.

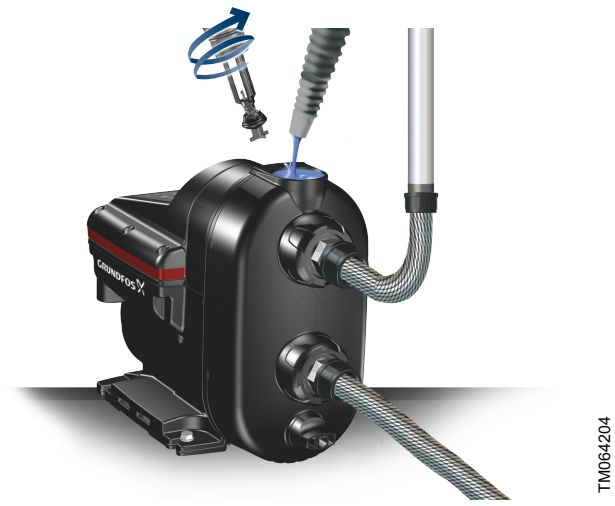

Priming the pump

Related information

7.3 Pressure setting

7.3 Pressure setting

The pump can be set to provide a water pressure between 1.5 to 5.5 bar (22 to 80 psi) at intervals of 0.5 bar (7 psi).

The factory setting is 3 bar (44 psi). See section System sizing.

We recommend to use the default pressure of 3.0 bar (44 psi) which will suit most applications.

The difference between the inlet pressure and outlet pressure must not exceed 3.5 bar (51 psi).

Example: If the inlet pressure is 0.5 bar (7 psi), the maximum outlet pressure is 4 bar (58 psi).

If you set the pressure too high, this might cause the pump to operate for up to three minutes after the tap is turned off.

You can achieve more energy efficient operation and prolong the life of the pump by making sure that the tank precharge pressure is optimised to 70 % of the setpoint of the pump. See the table below for recommended optimal tank precharge pressure.

Optimal tank precharge pressure

Setpoint [bar (psi)]	Optimal tank precharge pressure setting [bar (psi)]
5.5 (80)	3.9 (57)*
5 (73)	3.5 (51)*
4.5 (65)	3.2 (46)*
4 (58)	2.8 (4.1)
3.5 (51)	2.5 (36)
3 (44)	2.1 (30)
2.5 (36)	1.8 (26)
2 (29)	1.4 (20)
1.5 (22)	1.1 (16)

* Only with positive inlet pressure.

Related information

4.2 System sizing

7.3.1 Boosting from a well or a tank

If you are boosting from a well or a tank, make sure not to set the pressure setpoint too high. The difference between the inlet pressure and outlet pressure must not exceed 3.5 bar (51 psi).

Maximum setpoint	[bar (psi)]
Well application	3.0 (44)
Tank below ground level	3.5 (51)
Tank above ground level	4.0 (58)

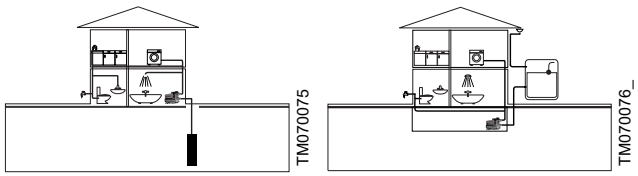

Boosting from a well or a tank

7.3.2 Boosting from the mains

The pressure settings 4.5, 5.0 and 5.5 bar (65, 73 and 80 psi) require a positive inlet pressure and these settings must only be used when boosting from the water mains.

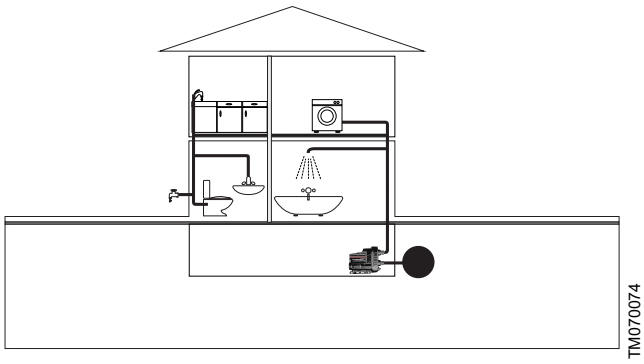

Boosting from the mains

7.3.3 Self-learning setpoint

If the pump cannot reach the user-defined pressure setpoint, the self-learning function will automatically lower the setpoint.

Related information

10.3.2 Self-learning function

7.4 Shaft seal run-in

The shaft seal faces are lubricated by the pumped liquid. A slight leakage from the shaft seal of up to 10 ml per day or 8 to 10 drops per hour may occur.

When the pump is started up for the first time, or when the shaft seal has been replaced, a certain run-in period is required before the leakage is reduced to an acceptable level. The time required for this depends on the operating conditions, that is, every time the operating conditions change, a new run-in period will be started.

Under normal conditions, the leaking liquid will evaporate. As a result, no leakage will be detected.

The leakage is visible where the screws are mounted on the base plate. If the unlikely event of an internal leakage occurs, the liquid will be drained through the bottom of the pump. Install the pump in such a way that no undesirable collateral damage can arise.

8. Handling and storing the product

8.1 Handling the product

Take care not to drop the pump as it may break.

8.2 Storing the product

If the pump is to be stored for a period of time, for example during the winter, drain it and store it indoors in a dry location.

Temperature range during storing must be -40 to +70 °C (-40 to +158 °F).

Maximum relative humidity during storing	95 % RH

Related information

12. Starting up the product after standstill

9. Control functions

9.1 Menu overview, SCALA2

TM063301

SCALA2 operating panel

SCALA2	Function
	On/off
	Increases the outlet pressure.
	Decreases the outlet pressure.
Reset	Resets alarms.
	Indicates the required outlet pressure.
Stop	Indicates that the pump has been stopped manually.
	Indicates that the operating panel is locked.

9.1.1 Pressure indicator, SCALA2

The pressure indicator shows the required outlet pressure from 1.5 to 5.5 bars (22 to 80 psi) in 0.5 bar (7.5 psi) intervals.

The illustration below shows a pump set to 3 bar (44 psi) indicated by two green lights, and a pump set to 3.5 bar (51 psi) indicated by one green light.

Flashing green lights indicate that the pump has automatically lowered the pressure.

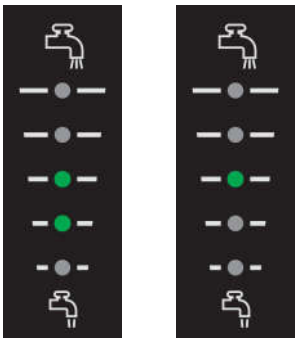

TM064345

SCALA2 outlet pressure indication

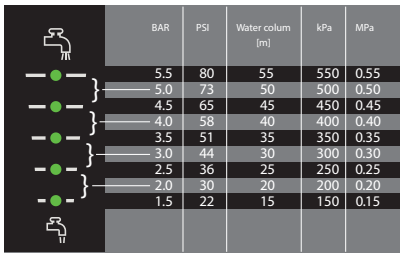

BAR	PSI	Water colum [m]	kPa	MPa
5.5	80	55	550	0.55
5.0	73	50	500	0.50
4.5	65	45	450	0.45
4.0	58	40	400	0.40
3.5	51	35	350	0.35
3.0	44	30	300	0.30
2.5	36	25	250	0.25
2.0	30	20	200	0.20
1.5	22	15	150	0.15

TM064187

Pressure indication table

Related information

7.3.3 Self-learning setpoint

9.1.2 Indicator lights for SCALA2

Indications	Description
	Operating indications
	The operating panel is locked.
1	Power supply failure
2	The pump is blocked, for instance the shaft seal has seized up.
3	Leakage in the system
4	Dry running or water shortage *
5	The maximum pressure has been exceeded or the setpoint cannot be reached.
6	The maximum runtime has been exceeded.
7	The temperature is outside the range.

* For fault number 4, dry running, the pump must be reset manually.
For fault number 4, water shortage, and the remaining faults, 1, 2, 3, 5, 6 and 7, the pump will reset whenever the cause has disappeared or been remedied.

For further information about system status, see section Fault finding.

Related information

10.3.3 Auto reset

14.3 Fault finding chart

10. Setting the product

The pump will remember the controller settings even if it is turned off.

10.1 Setting the outlet pressure

Adjust the outlet pressure by pressing ⌃⌄.

10.2 Locking and unlocking the operating panel

The operating panel can be locked, which means that the buttons do not function and no settings can be changed accidentally.

How to lock the operating panel

1. Hold down the ⌃⌄ buttons simultaneously for 3 seconds.
2. The operating panel is locked when 🔒 symbol lights up.

How to unlock the operating panel

1. Hold down the ⌃⌄ buttons simultaneously for 3 seconds.
2. The operating panel is unlocked when 🔓 symbol turns off.

10.3 Expert settings, SCALA2

Expert settings are for installers only.

The expert setting menu allows the installer to toggle between the following functions:

- self-learning
- auto reset
- anti cycling
- maximum continuous operating time.

10.3.1 Accessing the expert settings

Proceed as follows:

1. Hold down the Reset button for 5 seconds.
2. The 1 symbol will start flashing to indicate that the expert settings are active.

The pressure indicator now acts as the expert menu. A flashing green diode is the cursor. Move the cursor using the ⌃ ⌄ buttons, and toggle the selection on or off using the Reset button. The diode for each setting will light up when the setting is active.

⌃	Move cursor up.
⌄	Move cursor down.
Reset	Toggle settings.

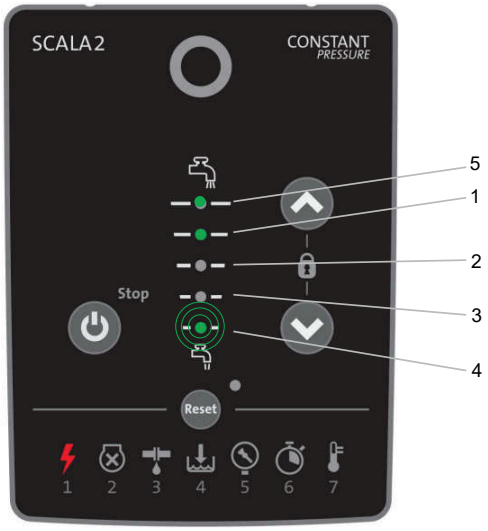

TM064346

Expert menu overview

Pos.	Description
1	Auto reset
2	Anti cycling
3	Maximum continuous operating time
4	Exit expert menu
5	Self-learning

10.3.2 Self-learning function

The factory setting for this function is "on".

On

If the pump cannot reach the user-defined pressure setpoint, the self-learning function will automatically adjust the setpoint.

The pump will lower the setpoint to either 4.5, 3.5 or 2.5 bar (65, 51 or 36 psi).

The self-learned setpoint is indicated on the operating panel by one flashing green light.

After every 24 hours, the pump will automatically attempt to revert to the original user-defined setpoint. If this is not possible, the pump will again return to the self-learned setpoint. The pump will continue to operate with the self-learning setpoint, until the user-defined setpoint can be reached.

Example:

The user-defined pressure is set to 5 bar (72 psi), indicated by constant green lights on the pressure indicator panel.

The pump is unable to reach this pressure due to negative pressure on the inlet side.

The self-learning function automatically adjusts the setpoint to 3.5 bar (51 psi), indicated by one flashing green light on the pressure indicator panel.

After 24 hours, the pump will automatically try to adjust the setpoint back to 5 bar (72 psi).

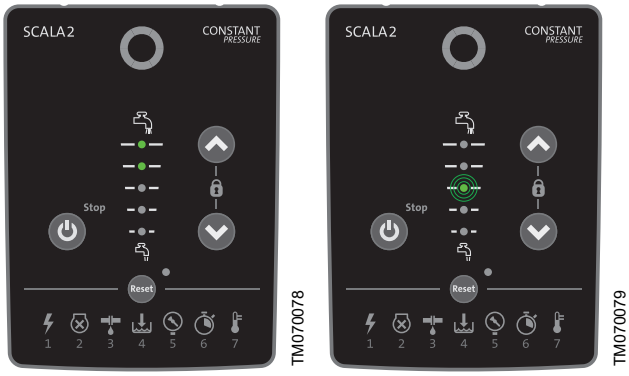

User-defined setpoint (left) and self-learned setpoint (right)

How to reset the self-learned setpoint

1. You can manually reset the settings by pressing any button on the operating panel. The pump will immediately try to reach the original setpoint.
2. If the pump keeps reducing the setpoint due to self-learning, we recommend to reduce the setpoint manually on the operating panel.

Off

If you set the self-learning function to off and the pump is unable to reach the desired setpoint, the pump will show alarm 5.

10.3.3 Auto reset

The factory setting for this function is "on".

On

This function allows the pump to automatically check if the operating conditions are back to normal. If the operating conditions are back to normal, the alarm indication will be reset automatically.

The auto reset function works in the following way:

Indication	Action
Water shortage	The pump will attempt eight restarts at five-minute intervals. If not successful, this cycle will be repeated after 24 hours.
Dry running (pump not primed)	Prime the pump and reset it manually.
All other indications	The pump will attempt three restarts within the first 60 seconds, then eight restart attempts at five-minute intervals. If not successful, this cycle will be repeated after 24 hours.

Off

All alarms must be reset manually by means of the Reset button.

Related information

9.1.2 Indicator lights for SCALA2

10.3.4 Anti cycling

The factory setting for this function is "off".

This function monitors the starts and stops of the pump.

Off

If the pump starts 40 times in a fixed pattern, there will be an alarm. The pump will remain in operation as normal.

On

If the pump starts and stops in a fixed pattern, there is a leakage in the system, and the pump will stop and show alarm 3.

Leakage in the system.

10.3.5 Maximum continuous operating time

The factory setting for this function is "off".

This function is a timer that can turn off the pump if it runs continuously for 30 minutes.

Off

If the pump exceeds the running time of 30 minutes, the pump will run depending on the flow.

On

If the pump exceeds the running time of 30 minutes, the pump will stop after 30 minutes of continuous operation, and it will show alarm 6. This alarm will always need to be reset manually.

Maximum runtime exceeded.

10.4 Resetting to factory settings

The pump can be reset to factory setting by pressing the buttons simultaneously for 5 seconds.

11. Servicing the product

DANGER
Electric shock
Death or serious personal injury
- Before starting any work on the product, make sure that the power supply has been switched off and that it cannot be accidentally switched on.

11.1 Maintaining the product

11.1.1 Insect filter

The pump has an insect filter to prevent insects from nesting in the pump.

The filter is placed on the bottom and can easily be removed and cleaned with a stiff brush. See the figure below..

Clean the insect filter once a year or as needed.

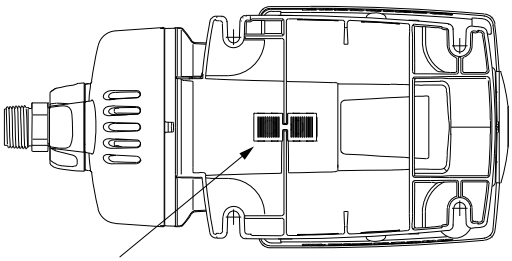

TM064537

Insect filter

11.1.2 Inlet and outlet valves

The pump is maintenance-free, but we recommend that you check and clean the inlet and outlet non-return valves once a year or as needed.

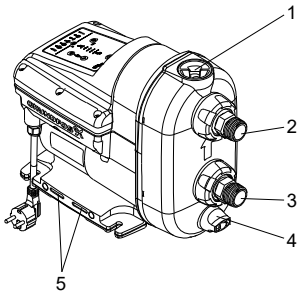

TM1040332

SCALA2 pump

To remove the inlet non-return valve, follow the steps below:

1. Turn off the power supply and disconnect the power plug.
2. Shut off the water source.
3. Open a tap to release the pressure in the pipe system.
4. Close the isolating valves and/or drain the pipes.
5. Gradually open and remove the priming plug. See the figure above (5).
6. Remove the drain plug and drain the pump. See the figure above (8).
7. Unscrew the union nut holding the inlet connection. See the figure above (7). Depending on the installation type, it may be necessary to remove the pipes from both the inlet and outlet connections.
8. Pull out the inlet connection.
9. Pull out the inlet non-return valve.
10. Clean the non-return valve with warm water and a soft brush.
11. Assemble the components in reverse order.

To remove the outlet non-return valve, follow the steps below:

1. Turn off the power supply and disconnect the power plug.
2. Shut off the water source.
3. Open a tap to release the pressure in the pipe system.
4. Close the isolating valves and/or drain the pipes.
5. Gradually open and remove the priming plug. See the figure above (5). The plug and non-return valve are one unit.
6. Clean the non-return valve with warm water and a soft brush.
7. Assemble the components in reverse order.

TM064331

Outlet and inlet non-return valves

Pos.	Description
1	Outlet non-return valve
2	Inlet non-return valve

11.2 Customer service information

For further information on service parts, see Grundfos Product Center on *www.product-selection.grundfos.com*.

11.3 Service kits

For further information on service kits, see Grundfos Product Center at *www.product-selection.grundfos.com*.

12. Starting up the product after standstill

1. Check that the pump is not blocked by following the instructions in section *12.1 Deblocking the pump*.
2. If the pump has been drained, it must be filled with liquid before startup. See section *7.1 Priming the pump*.
3. Start up the pump. Follow the instructions in section *7. Starting up the product*.
4. The pump will remember the controller settings even if it is turned off.

Related information

7. Starting up the product
7.1 Priming the pump
12.1 Deblocking the pump

12.1 Deblocking the pump

DANGER
Electric shock
Death or serious personal injury
- Switch off the power supply before you start any work on the product. Make sure that the power supply cannot be switched on accidentally.

The end cover incorporates a plug which can be removed by means of a suitable tool. This makes it possible to deblock the pump shaft if it has seized up as a result of inactivity.

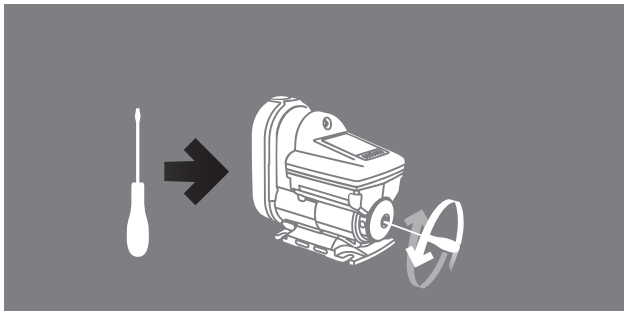

Deblocking the pump

13. Taking the product out of operation

If the pump is taken out of operation for a period of time, for example during the winter, it must be disconnected from the power supply and placed in a dry location.

Proceed as follows:

1. Stop the pump by means of the on/off button ⏻ .
2. Disconnect the power supply.
3. Open a tap to release the pressure in the pipe system.
4. Close the isolating valves and/or drain the pipes.
5. Gradually loosen the priming plug to release the pressure in the pump.
6. Remove the drain plug to drain the pump. See the figure below.
7. We recommend storing the pump indoors in a dry location. Due to humidity, the disconnected pump must not be left outside for a longer period of time.

Draining the pump

14. Fault finding

14.1 Grundfos Eye operating indications

Grundfos Eye		Indication	Description
	TM053827	No lights are on.	**Power off** The pump is not running.
	TM053829	Two opposite green indicator lights running in the direction of rotation of the pump.	**Power on** The pump is running.
	TM063806	Two opposite green indicator lights are permanently on.	**Power on** The pump is not running.
	TM053839	Two opposite red indicator lights are flashing simultaneously.	**Alarm** The pump has stopped.
	TM1040615	Two opposite red indicator lights are flashing three to five times and in between two opposite green indicator lights are flashing one time.	**Alarm** The pump has stopped. Contact Grundfos.

14.2 Fault resetting

You can reset a fault indication in one of the following ways:

- When you have eliminated the fault cause, reset the pump manually by pressing the RESET button. The pump will then revert to normal duty.
- If the fault disappears by itself, the pump will attempt to reset automatically and the fault indication will disappear if automatic reset is successful and provided that you have enabled the auto reset function in the service menu.

14.3 Fault finding chart

DANGER

Electric shock
Death or serious personal injury
- Before starting any work on the product, make sure that the power supply has been switched off and that it cannot be accidentally switched on.

Fault	Grundfos Eye	Indicator light	Automatic reset	Cause	Remedy
The pump is not running.		-	-	Power supply failure.	Switch on the power supply. Check the cables and cable connections for defects and loose connections and check for blown fuses in the electrical installation.
		1	Yes	The power supply is out of prescribed voltage range.	Check the power supply and the pump nameplate. Reestablish the power supply within the prescribed voltage range.
		2	No	The shaft seal has seized up.	See section Starting up the product after standstill.
			No	The pump is blocked by impurities.	See section Starting up the product after standstill. Contact Grundfos Service if the problem persists.
		4	Yes	Dry running.	Check the water source, and prime the pump.
		6	No	The maximum runtime has been exceeded.	Check the installation for leakage and reset the alarm.
		3	No	The internal non-return valve is defective or blocked in completely or partly open position.	Clean, repair or replace the non-return valve. See section Servicing the product.
The pump is running.		3	-	Leakage from the pipe system, or the non-return valve is not properly closed due to impurities.	Check and repair the pipe system, or clean, repair or replace the non-return valve.
		3	-	Small continuous consumption.	Check the taps and reconsider the usage pattern (ice machines, water evaporators for air-conditioning, etc.).
		7	-	The temperature of the pump and water is below 3 °C.	Consider protecting the pump and the installation against frost.
The pump performance is insufficient.		-	-	The pump inlet pressure is too low.	Check the inlet conditions of the pump.
		-		The pump is undersized.	Replace the pump with a bigger pump.
		-	-	The inlet pipe, the inlet strainer or the pump is partly blocked by impurities.	Clean the inlet pipe or the pump.
		-	-	There is a leakage in the inlet pipe.	Repair the inlet pipe.
		-	-	There is air in the inlet pipe or the pump.	Prime the inlet pipe and the pump. Check the inlet conditions of the pump.
		-	-	The required outlet pressure is too low for the installation.	Increase the pressure setting (arrow up).
		7	Yes	The maximum temperature has been exceeded and the pump is running at reduced performance.	Check the cooling conditions. Protect the pump against direct sunlight or any nearby heat sources.

Fault	Grundfos Eye	Indicator light	Automatic reset	Cause	Remedy
System overpressure.		5	Yes	The setpoint is set too high. The difference between the outlet pressure and the inlet pressure must not exceed 3.5 bar (51 psi).	Reduce the pressure to a new setpoint (maximum 3.5 bar (51 psi) + positive inlet pressure). Example: If the inlet pressure is 0.5 bar (7 psi), the maximum outlet pressure is 4 bar (58 psi).
			Yes	The maximum pressure has been exceeded, the inlet pressure is higher than 6 bar, 0.6 MPa (87 psi).	Check the inlet conditions.
			Yes	The maximum pressure has been exceeded. Equipment elsewhere in the system causes a high pressure at the pump, for example water heater or defective safety equipment.	Check the installation.
You can reset the pump, but it runs only for a few seconds.		4	Yes	Dry running or water shortage.	Check the water source, and prime the pump.
		4	Yes	The inlet pipe is blocked by impurities.	Clean the inlet pipe.
		4	Yes	The foot or non-return valve is blocked in closed position.	Clean, repair or replace the foot or non-return valve.
		4	Yes	There is a leakage in the inlet pipe.	Repair the inlet pipe.
		4	Yes	Air in the inlet pipe or the pump.	Prime the inlet pipe and the pump. Check the inlet conditions of the pump.
You can reset the pump, but it starts repeatedly, immediately after stopping.		3	No	The internal non-return valve is defective or blocked in completely or partly open position.	Clean, repair or replace the non-return valve.
		3	No	The tank precharge pressure is not correct.	Adjust the tank precharge pressure to 70 % of the required outlet pressure.

Related information

11. Servicing the product

12. Starting up the product after standstill

15. Technical data

15.1 Operating conditions

Temperature	[°C (°F)]
Max. ambient temperature	
1 x 208-230 V, 60 Hz:	45 (113)
1 x 115 V, 60 Hz:	45 (113)
1 x 200-240 V, 50/60 Hz:	55 (131)
Max. liquid temperature	45 (113)

Pressure	[bar (psi)]	[MPa]
Max. system pressure	10 (145)	1
Max. inlet pressure	6 (87)	0.6

Other operating data	
Max. head	45 m (147 ft)
IP rating	X4D (outdoor installation)
Pumped liquid	Clean water
Noise level	< 47 dB(A) [1]

1 47 dB(A) is measured in a typical application with pressure control mode (2.5 bar (36 psi) and 1 m^3/h). In non-typical applications noise might increase up to 58 dB.

15.2 Mechanical data

Pipe connections are R 1" or NPT 1".

15.3 Electrical data

Supply voltage [V]	Frequency [Hz]	$I_{max.}$ [A]	P1 [W]	Stand-by power [W]
1 x 200-240	50/60	2.3 - 2.8	550	2
				2
				2
				2
1 x 208-230	60	2.3 - 2.8	550	2
1 x 115	60	5 - 5.7	560	2

Supply voltage [V]	Frequency [Hz]	Plug
1 x 200-240	50/60	IEC, type E&F
		IEC, type I
		IEC, type G
		None
1 x 208-230	60	NEMA 6-15P
1 x 115	60	IEC, type B, NEMA 5-15P

15.4 Dimensions and weights

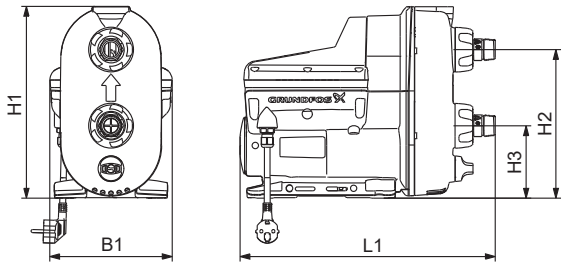

Dimensions of SCALA2

Pos.	H1 [mm] [inch]	H2 [mm] [inch]	H3 [mm] [inch]	L1 [mm] [inch]	B1 [mm] [inch]	Weight [kg] [lb]
SCALA2	302 11.9	234 9.2	114 4.5	403 15.9	193 7.6	10 22

16. Disposing of the product

This product has been designed with focus on the disposal and recycling of materials. The following disposal values apply to all variants of Grundfos SCALA2 pumps:

- minimum 85 % for recycling
- maximum 10 % for incineration
- maximum 5 % for depositing.

Values are percent of total weight.

This product or parts of it must be disposed of in an environmentally sound way.

1. Use the public or private waste collection service.
2. If this is not possible, contact the nearest Grundfos company or service workshop.

The crossed-out wheelie bin symbol on a product means that it must be disposed of separately from household waste. When a product marked with this symbol reaches its end of life, take it to a collection point designated by the local waste disposal authorities. The separate collection and recycling of such products will help protect the environment and human health.

See also end-of-life information at *www.grundfos.com/product-recycling*.

Argentina
Bombas GRUNDFOS de Argentina S.A.
Ruta Panamericana km. 37.500industin
1619 - Garín Pcia. de B.A.
Tel.: +54-3327 414 444
Fax: +54-3327 45 3190

Australia
GRUNDFOS Pumps Pty. Ltd.
P.O. Box 2040
Regency Park
South Australia 5942
Tel.: +61-8-8461-4611
Fax: +61-8-8340-0155

Austria
GRUNDFOS Pumpen Vertrieb Ges.m.b.H.
Grundfosstraße 2
A-5082 Grödig/Salzburg
Tel.: +43-6246-883-0
Fax: +43-6246-883-30

Belgium
N.V. GRUNDFOS Bellux S.A.
Boomsesteenweg 81-83
B-2630 Aartselaar
Tel.: +32-3-870 7300
Fax: +32-3-870 7301

Belarus
Представительство ГРУНДФОС в Минске
220125, Минск
ул. Шафарнянская, 11, оф. 56, БЦ «Порт»
Тел.: +375 17 397 397 3
+375 17 397 397 4
Факс: +375 17 397 397 1
E-mail: minsk@grundfos.com

Bosnia and Herzegovina
GRUNDFOS Sarajevo
Zmaja od Bosne 7-7A
BiH-71000 Sarajevo
Tel.: +387 33 592 480
Fax: +387 33 590 465
www.ba.grundfos.com
E-mail: grundfos@bih.net.ba

Brazil
BOMBAS GRUNDFOS DO BRASIL
Av. Humberto de Alencar Castelo Branco, 630
CEP 09850 - 300
São Bernardo do Campo - SP
Tel.: +55-11 4393 5533
Fax: +55-11 4343 5015

Bulgaria
Grundfos Bulgaria EOOD
Slatina District
Iztochna Tangenta street no. 100
BG - 1592 Sofia
Tel.: +359 2 49 22 200
Fax: +359 2 49 22 201
E-mail: bulgaria@grundfos.bg

Canada
GRUNDFOS Canada inc.
2941 Brighton Road
Oakville, Ontario
L6H 6C9
Tel.: +1-905 829 9533
Fax: +1-905 829 9512

China
GRUNDFOS Pumps (Shanghai) Co. Ltd.
10F The Hub, No. 33 Suhong Road
Minhang District
Shanghai 201106 PRC
Tel.: +86 21 612 252 22
Fax: +86 21 612 253 33

Columbia
GRUNDFOS Colombia S.A.S.
Km 1.5 vía Siberia-Cota Conj. Potrero Chico,
Parque Empresarial Arcos de Cota Bod. 1A.
Cota, Cundinamarca
Tel.: +57(1)-2913444
Fax: +57(1)-8764586

Croatia
GRUNDFOS CROATIA d.o.o.
Buzinski prilaz 38, Buzin
HR-10010 Zagreb
Tel.: +385 1 6595 400
Fax: +385 1 6595 499
www.hr.grundfos.com

Czech Republic
GRUNDFOS Sales Czechia and Slovakia s.r.o.
Čajkovského 21
779 00 Olomouc
Tel.: +420-585-716 111

Denmark
GRUNDFOS DK A/S
Martin Bachs Vej 3
DK-8850 Bjerringbro
Tel.: +45-87 50 50 50
Fax: +45-87 50 51 51
E-mail: info_GDK@grundfos.com
www.grundfos.com/DK

Estonia
GRUNDFOS Pumps Eesti OÜ
Peterburi tee 92G
11415 Tallinn
Tel.: + 372 606 1690
Fax: + 372 606 1691

Finland
OY GRUNDFOS Pumput AB
Trukkikuja 1
FI-01360 Vantaa
Tel.: +358-(0) 207 889 500

France
Pompes GRUNDFOS Distribution S.A.
Parc d'Activités de Chesnes
57, rue de Malacombe
F-38290 St. Quentin Fallavier (Lyon)
Tel.: +33-4 74 82 15 15
Fax: +33-4 74 94 10 51

Germany
GRUNDFOS GMBH
Schlüterstr. 33
40699 Erkrath
Tel.: +49-(0) 211 929 69-0
Fax: +49-(0) 211 929 69-3799
E-mail: infoservice@grundfos.de
Service in Deutschland:
kundendienst@grundfos.de

Greece
GRUNDFOS Hellas A.E.B.E.
20th km. Athinon-Markopoulou Av.
P.O. Box 71
GR-19002 Peania
Tel.: +0030-210-66 83 400
Fax: +0030-210-66 46 273

Hong Kong
GRUNDFOS Pumps (Hong Kong) Ltd.
Unit 1, Ground floor, Siu Wai industrial Centre
29-33 Wing Hong Street & 68 King Lam Street, Cheung Sha Wan
Kowloon
Tel.: +852-27861706 / 27861741
Fax: +852-27858664

Hungary
GRUNDFOS Hungária Kft.
Tópark u. 8
H-2045 Törökbálint
Tel.: +36-23 511 110
Fax: +36-23 511 111

India
GRUNDFOS Pumps india Private Limited
118 Old Mahabalipuram Road
Thoraipakkam
Chennai 600 097
Tel.: +91-44 2496 6800

Indonesia
PT GRUNDFOS Pompa
Graha intirub Lt. 2 & 3
Jln. Cililitan Besar No.454. Makasar, Jakarta Timur
ID-Jakarta 13650
Tel.: +62 21-469-51900
Fax: +62 21-460 6910 / 460 6901

Ireland
GRUNDFOS (Ireland) Ltd.
Unit A, Merrywell Business Park
Ballymount Road Lower
Dublin 12
Tel.: +353-1-4089 800
Fax: +353-1-4089 830

Italy
GRUNDFOS Pompe Italia S.r.l.
Via Gran Sasso 4
I-20060 Truccazzano (Milano)
Tel.: +39-02-95838112
Fax: +39-02-95309290 / 95838461

Japan
GRUNDFOS Pumps K.K.
1-2-3, Shin-Miyakoda, Kita-ku
Hamamatsu
431-2103 Japan
Tel.: +81 53 428 4760
Fax: +81 53 428 5005

Korea
GRUNDFOS Pumps Korea Ltd.
6th Floor, Aju Building 679-5
Yeoksam-dong, Kangnam-ku, 135-916
Seoul, Korea
Tel.: +82-2-5317 600
Fax: +82-2-5633 725

Latvia
SIA GRUNDFOS Pumps Latvia
Deglava biznesa centrs
Augusta Deglava ielā 60
LV-1035, Rīga,
Tel.: + 371 714 9640, 7 149 641
Fax: + 371 914 9646

Lithuania
GRUNDFOS Pumps UAB
Smolensko g. 6
LT-03201 Vilnius
Tel.: + 370 52 395 430
Fax: + 370 52 395 431

Malaysia
GRUNDFOS Pumps Sdn. Bhd.
7 Jalan Peguam U1/25
Glenmarie industrial Park
40150 Shah Alam, Selangor
Tel.: +60-3-5569 2922
Fax: +60-3-5569 2866

Mexico
Bombas GRUNDFOS de México S.A. de C.V.
Boulevard TLC No. 15
Parque industrial Stiva Aeropuerto
Apodaca, N.L. 66600
Tel.: +52-81-8144 4000
Fax: +52-81-8144 4010

Netherlands
GRUNDFOS Netherlands
Veluwezoom 35
1326 AE Almere
Postbus 22015
1302 CA ALMERE
Tel.: +31-88-478 6336
Fax: +31-88-478 6332
E-mail: info_gnl@grundfos.com

New Zealand
GRUNDFOS Pumps NZ Ltd.
17 Beatrice Tinsley Crescent
North Harbour Industrial Estate
Albany, Auckland
Tel.: +64-9-415 3240
Fax: +64-9-415 3250

Norway
GRUNDFOS Pumper A/S
Strømsveien 344
Postboks 235, Leirdal
N-1011 Oslo
Tel.: +47-22 90 47 00
Fax: +47-22 32 21 50

Poland
GRUNDFOS Pompy Sp. z o.o.
ul. Klonowa 23
Baranowo k. Poznania
PL-62-081 Przeźmierowo
Tel.: (+48-61) 650 13 00
Fax: (+48-61) 650 13 50

Portugal
Bombas GRUNDFOS Portugal, S.A.
Rua Calvet de Magalhães, 241
Apartado 1079
P-2770-153 Paço de Arcos
Tel.: +351-21-440 76 00
Fax: +351-21-440 76 90

Romania
GRUNDFOS Pompe România SRL
S-PARK BUSINESS CENTER, Clădirea A2, etaj 2
Str. Tipografilor, Nr. 11-15, Sector 1, Cod 013714
Bucuresti, Romania
Tel.: 004 021 2004 100
E-mail: romania@grundfos.ro

Russia
ООО Грундфос Россия
ул. Школьная, 39-41
Москва, RU-109544, Russia
Тел. (+7) 495 564-88-00 (495) 737-30-00
Факс (+7) 495 564 8811
E-mail grundfos.moscow@grundfos.com

Serbia
Grundfos Srbija d.o.o.
Omladinskih brigada 90b
11070 Novi Beograd
Tel.: +381 11 2258 740
Fax: +381 11 2281 769
www.rs.grundfos.com

Singapore
GRUNDFOS (Singapore) Pte. Ltd.
25 Jalan Tukang
Singapore 619264
Tel.: +65-6681 9688
Faxax: +65-6681 9689

Slovakia
GRUNDFOS s.r.o.
Prievozská 4D 821 09 BRATISLAVA
Tel.: +421 2 5020 1426
sk.grundfos.com

Slovenia
GRUNDFOS LJUBLJANA, d.o.o.
Leskoškova 9e, 1122 Ljubljana
Tel.: +386 (0) 1 568 06 10
Fax: +386 (0)1 568 06 19
E-mail: tehnika-si@grundfos.com

South Africa
GRUNDFOS (PTY) LTD
16 Lascelles Drive, Meadowbrook Estate
1609 Germiston, Johannesburg
Tel.: (+27) 10 248 6000
Fax: (+27) 10 248 6002
E-mail: lgradidge@grundfos.com

Spain
Bombas GRUNDFOS España S.A.
Camino de la Fuentecilla, s/n
E-28110 Algete (Madrid)
Tel.: +34-91-848 8800
Fax: +34-91-628 0465

Sweden
GRUNDFOS AB
Box 333 (Lunnagårdsgatan 6)
431 24 Mölndal
Tel.: +46 31 332 23 000
Fax: +46 31 331 94 60

Switzerland
GRUNDFOS Pumpen AG
Bruggacherstrasse 10
CH-8117 Fällanden/ZH
Tel.: +41-44-806 8111
Fax: +41-44-806 8115

Taiwan
GRUNDFOS Pumps (Taiwan) Ltd.
7 Floor, 219 Min-Chuan Road
Taichung, Taiwan, R.O.C.
Tel.: +886-4-2305 0868
Fax: +886-4-2305 0878

Thailand
GRUNDFOS (Thailand) Ltd.
92 Chaloem Phrakiat Rama 9 Road
Dokmai, Pravej, Bangkok 10250
Tel.: +66-2-725 8999
Fax: +66-2-725 8998

Turkey
GRUNDFOS POMPA San. ve Tic. Ltd. Sti.
Gebze Organize Sanayi Bölgesi
Ihsan dede Caddesi
2. yol 200. Sokak No. 204
41490 Gebze/ Kocaeli
Tel.: +90 - 262-679 7979
Fax: +90 - 262-679 7905
E-mail: satis@grundfos.com

Ukraine
ТОВ "ГРУНДФОС УКРАЇНА"
Бізнес Центр Європа
Столичне шосе, 103
м. Київ, 03131, Україна
Tel.: (+38 044) 237 04 00
Fax: (+38 044) 237 04 01
E-mail: ukraine@grundfos.com

United Arab Emirates
GRUNDFOS Gulf Distribution
P.O. Box 16768
Jebel Ali Free Zone, Dubai
Tel.: +971 4 8815 166
Fax: +971 4 8815 136

United Kingdom
GRUNDFOS Pumps Ltd.
Grovebury Road
Leighton Buzzard/Beds. LU7 4TL
Tel.: +44-1525-850000
Fax: +44-1525-850011

U.S.A.
Global Headquarters for WU
856 Koomey Road
Brookshire, Texas 77423 USA
Phone: +1-630-236-5500

Uzbekistan
Grundfos Tashkent, Uzbekistan
The Representative Office of Grundfos Kazakhstan in Uzbekistan
38a, Oybek street, Tashkent
Tel.: (+998) 71 150 3290 / 71 150 3291
Fax: (+998) 71 150 3292

© 2022 Grundfos Holding A/S, all rights reserved.

Trademarks displayed in this material, including but not limited to Grundfos and the Grundfos logo, are registered trademarks owned by The Grundfos Group.

98880508 **05.2022**

ECM: 1340778