JP and JP Booster

GRUNDFOS

Table of contents

1. Product introduction 3
Applications 3
Pumped liquids 3
Features and benefits 4
Performance range 4
Product range 4

2. Installation and operation 5
Mechanical installation 5
Installation examples 7
Electrical connection 7

3. Selection guide 8

4. JP pump 9
Product range 9
Motor 9
Features and benefits of the JP pump 9
Performance curves 10
Technical data 11
Approvals and markings 13

5. JP PM Booster 14
Product range 14
Pressure manager 14
Motor 14
Features and benefits 14
Technical data 15
Approvals and markings 17

6. JP PT-V Booster 18
Product range 18
Motor 18
Features and benefits 18
Technical data 19
Approvals and markings 21

7. JP PT-H Booster 22
Product range 22
Motor 22
Features and benefits 22
Technical data 23
Approvals and markings 25

8. Product numbers 26
JP 26
JP PM 27
JP PT-V 27
JP PT-H 27

9. Grundfos Product Center 28

10. Document quality feedback 29

1. Product introduction

Grundfos jet pumps and boosters are designed for domestic use and ensure a constant supply of clean water to households, gardens and light commercial applications.

JP

JP is a self-priming, single-stage centrifugal jet pump. The jet pump has an excellent suction capacity and is designed for long and trouble-free operation. The built-in ejector with guide vanes ensures optimum self-priming properties. JP is small and compact, and the lifting handle makes JP handy and easy to carry. The pump housing is made of stainless steel.

JP boosters

JP boosters are compact systems for pressure boosting with pressure control. The pressure control gives more comfort to the user, as it allows the pump to start and stop automatically according to demand.

JP boosters are available in the following variants:

- JP PM: a jet pump with a pressure manager
- JP PT-V: a jet pump with a vertical pressure tank and a pressure switch
- JP PT-H: a jet pump with a horizontal pressure tank and a pressure switch.

TM088830

Left to right: JP PT-V, JP PT-H, JP PM and JP

Applications

The pumps and boosters are suitable for domestic water supply, where pressure boosting and self-priming is needed.

The product can be used in a wide variety of applications, such as these:

- one- and two-family houses, boosting the pressure of water coming from a break tank, roof tank or a well
- garden irrigation
- car wash
- small-scale agriculture and horticulture
- light commercial applications.

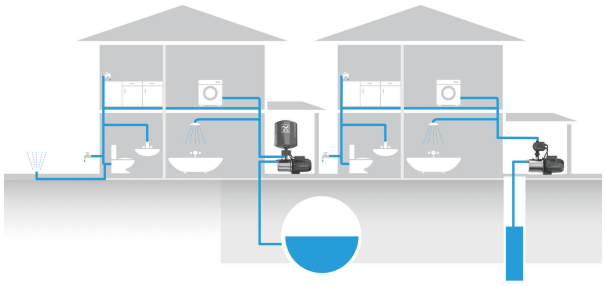

TM072524

Examples of applications with JP Boosters

Pumped liquids

The product is suitable for pumping clean, thin, non-aggressive, non-toxic and non-explosive liquids without solid particles or fibres. Examples of liquids:

- potable water
- rainwater.

Features and benefits

Features	JP	JP PT	JP PM
Self-priming	√	√	√
Auto start/stop	-	√	√
Pressure indication (pressure gauge)	-	√	-
Alarm indication	-	-	√
Integrated non-return valve	-	-	√
Dry-running protection	-	-	√

Features and benefits of the JP pump

- Self-priming, featuring a suction lift of up to 8 m
- robust design and corrosion-free materials for a long lifetime.

Features and benefits of the pressure tank

- Automatic start/stop according to consumption
- controlled pressure for the comfort of constant water supply without pressure drops
- pressure gauge
- fewer starts and stops in case of low water consumption or leakage loss
- reduced water hammer in the pipes.

Features and benefits of the pressure manager

- Automatic start/stop according to consumption
- dry-running protection to avoid damage of the pump
- integrated non-return valve
- status indication: power on, pump running, alarm
- rotary outlet connection for easy adaption to local pipe system.

Performance range

The performance curves show the range of the JP pumps. For JP PM Boosters, there is a slight pressure drop over the pressure manager.

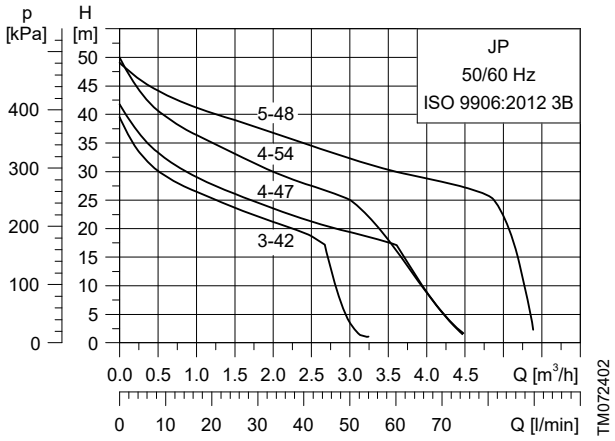

Performance range, JP

Related information

Performance curves

Product range

Pump type	Max. flow rate [m³/h]	Max. head [m]
JP 3-42	3	42
JP 4-47	4	47
JP 4-54	4	54
JP 5-48	5	48

2. Installation and operation

Mechanical installation

Placing the pump above ground is generally a convenient way to establish a water or rainwater supply. The pump can be installed both indoors and outdoors in a well-ventilated location. When installed outdoors, the product needs a suitable cover to protect it from exposure to direct sunlight, rain, snow and frost.

Place the product as close to the liquid to be pumped as possible to minimise the length of the inlet pipe. To ensure cooling of the motor and easy access, we recommend a clearance of 0.5 m on three sides of the product. Fasten the product to a solid horizontal foundation with a maximum inclination angle of ± 5 °. The base plate must be facing downwards.

If the pump is used for pumping rainwater or well water, we recommend that you install a filter on the inlet side to protect the pump from sand, gravel or other debris. If the pump is installed above the liquid level, we recommend that you fit a foot valve with strainer to the inlet pipe.

Pipe system

To obtain the optimum suction capacity which the dry-installed pump is designed for, the correct dimension of the pipe system is important. If a hose is used as inlet pipe, it must be non-collapsible.

The diameter of the inlet pipe must be larger than 1", if the inlet pipe is longer than 10 m (32.8 ft), or if the suction lift exceeds 4 m (13.1 ft).

Inlet-pipe length and suction lift

The length of the inlet pipe of self-priming pumps depends on the geodetic suction lift. The recommended maximum length of the inlet pipe according to the suction lift is shown in the figure below. The example shows that if the suction lift is 2.5 m, the length of the inlet pipe must not exceed 25 m.

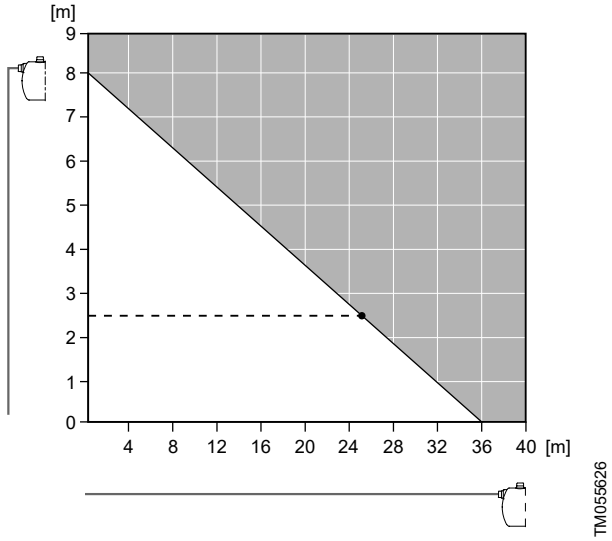

Maximum inlet-pipe length (horizontal axis) according to the suction lift (vertical axis)

Inlet and outlet pipes

Please follow these general precautions when connecting the inlet and outlet pipes.

- Install the pipes so that air pockets are avoided, especially on the inlet side of the pump.
- Use eccentric reducers with the tapered side down.
- Make sure the pipes are as straight as possible to avoid unnecessary bends and fittings. We recommend long-radius 90° pipe bends to decrease friction loss.
- Run the inlet pipe as direct as possible and, ideally, make sure the length is at least ten times the pipe diameter.
- If possible, run a horizontal inlet line. We recommend a gradual upward slope for pumps operating in suction-lift conditions, and a gradual downward slope for pumps operating in positive inlet-pressure conditions.
- A short pipe must be of the same diameter as the inlet port or larger.
- A long pipe must be one or two sizes larger than the inlet port, depending on the length.

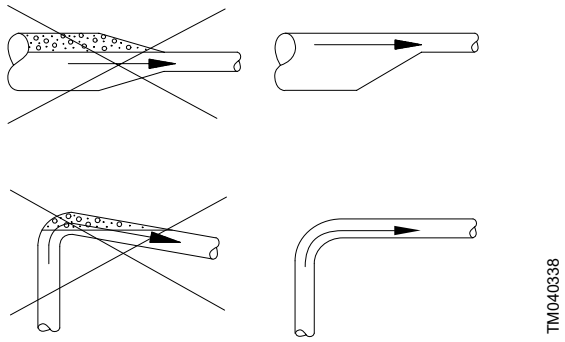

Recommended pipe installation to avoid friction and air pockets

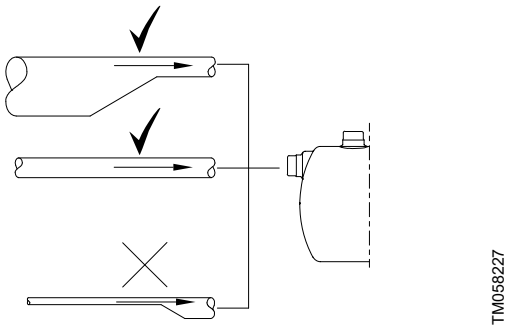

Correct pipe sizing for connection to the pump inlet or outlet

Maximum system pressure

The maximum inlet pressure depends on the head at the actual duty point. The sum of the inlet pressure and the head must not exceed the maximum system pressure.

We recommend installing a pressure-relief valve to protect the pump so that the outlet pressure does not exceed the maximum system pressure.

Installation examples

We recommend that you follow the installation examples.

Valves are not supplied with the pump.

Suction from a well

This installation example shows the JP PM, but it applies to all variants of the JP range.

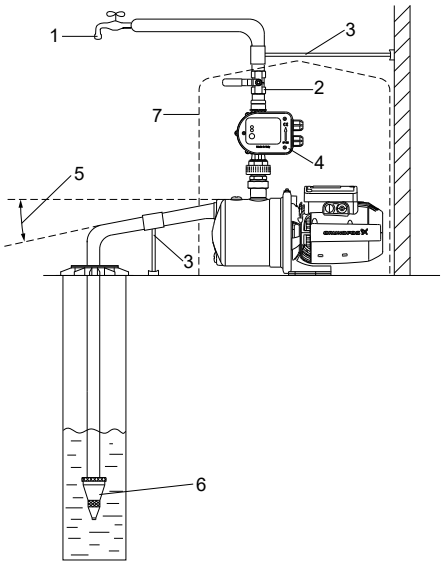

Pos.	Description
1	Highest tapping point.
2	Isolating valve.
3	Pipe support.
4	Pressure manager.
5	5° angle.
6	Foot valve with strainer. The foot valve is optional. We recommend using a foot valve together with JP PM.
7	Pump cover.

Suction from a tank

This installation example shows JP PM, but it applies to all variants of the JP range.

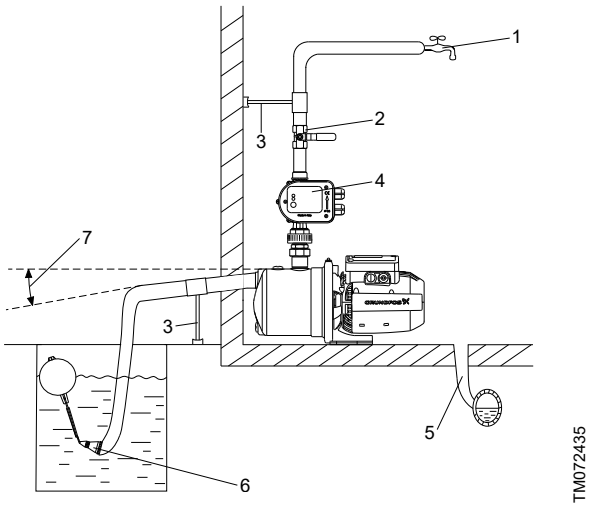

Pos.	Description
1	Highest tapping point.
2	Isolating valve.
3	Pipe support.
4	Pressure manager.
5	Drain to sewer.
6	Strainer. A foot valve is optional. We recommend using a foot valve together with JP PM.
7	5° angle.

Electrical connection

The electrical connection and protection must be carried out in accordance with local regulations. Please also observe the following requirements:

- Make sure that the pump and pressure-control unit are suitable for the power supply to which they are to be connected.
- Make sure that the pump is suitable for the power supply to which they are to be connected.
- The pump and pressure-control unit must always be correctly earthed.
- The pump must always be correctly earthed.
- The plug on the pump must have the same protective earth (PE) connection system as the power outlet. If not, use a suitable adapter if allowed by local regulations.
- A pump without plug must be connected to an external main switch or wired with a plug.

Motor protection

The pump incorporates current- and temperature-dependent motor protection. If the pump is running without water, is blocked or otherwise overloaded, the built-in thermal switch will cut out. When the motor has cooled sufficiently, it will restart automatically.

No external motor protection is required.

3. Selection guide

This guide helps you size and select the right JP product. Follow the instructions below to determine which product variant is best suited to your needs.

Selection table

	1-5 taps or 1-2 m^3/h	6-10 taps or 3-4 m^3/h	11-20 taps or 4-5 m^3/h
Water supply on demand	JP 3-XX	JP 4-XX	JP 5-XX
Constant water supply with pressure-drop compensation	JP 3-XX PT-V/H	JP 4-XX PT-V/H	JP 5-XX PT-V/H
Constant water supply, dry-running protection and anti-cycling function	JP 3-XX PM	JP 4-XX PM	JP 5-XX PM

How to use the table

1. Size the product
   Determine the size of your product by selecting the rated flow in either the number of taps in the system or the amount of m^3 per hour.
2. Select variant
   Water supply on demand:
   Choose the JP pump for applications such as garden irrigation, small-scale agriculture and car washes. The product is turned on and off by the user, making it ideal for time-limited tasks.
   Constant water supply with pressure-drop compensation:
   Choose JP PT (pump with vertical or horizontal pressure tank) for applications such as one- and two-family houses as well as agriculture. The built-in pressure switch, which makes the product automatically start and stop, ensures the comfort of constant pressure.
   Constant water supply and dry-running protection:
   Choose JP PM (pump with pressure manager) for applications with unstable water supply and in well installations, where dry-running protection is needed. The pressure manager makes the product automatically start and stop. JP PM is suitable for one- and two-family houses as well as agriculture applications.

4. JP pump

TM072472

Grundfos JP is a self-priming, single-stage centrifugal jet pump with axial inlet and radial outlet. The built-in ejector with guide vanes ensures optimum self-priming properties, featuring a suction lift of up to 8 m.

JP is small and compact, and the lifting handle makes JP handy and easy to carry. The pump housing is made of stainless steel.

To increase comfort, the JP pump can be fitted with a Grundfos Pressure Manager or with a pressure switch combined with a Grundfos pressure tank.

Product range

Pump type	Max. flow rate [m^3/h]	Max. head [m]
JP 3-42	3	42
JP 4-47	4	47
JP 4-54	4	54
JP 5-48	5	48

Motor

The motor is air cooled and equipped with oversized, sealed, greased-for-life ball bearings to ensure silent operation and minimum service.

Single-phase motors have a built-in thermal switch and require no additional motor protection.

Features and benefits of the JP pump

- Self-priming, featuring a suction lift of up to 8 m
- robust design and corrosion-free materials for a long lifetime.

Self-priming

The self-priming function ensures a stable operation, even if the pump is not fully filled with liquid. The self-priming pump is able to lift liquid from below the inlet level and handle a mix of air and liquid until the pump reaches a fully-primed pumping condition.

Robust design

The pump is designed for long and trouble-free operation. Excellent corrosion resistance is ensured by the stainless steel pump housing and composite impeller, and the paint on the motor stool is applied by electrophoresis.

Performance curves

The curves show the pump performance of JP pump variants at different suction lift heights.

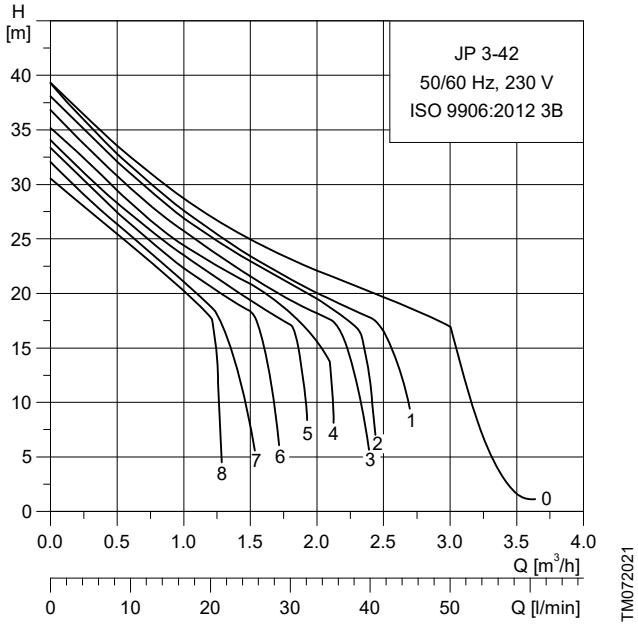

JP 3-42 performance curves for suction lifts of 0 to 8 m

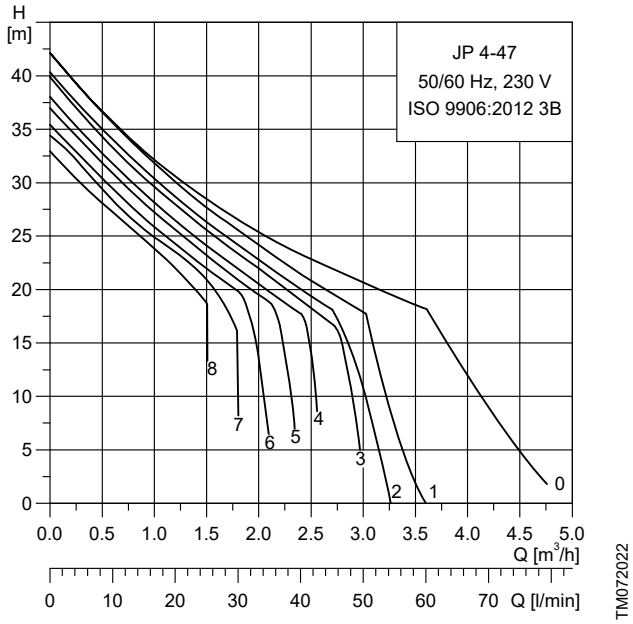

JP 4-47 performance curves for suction lifts of 0 to 8 m

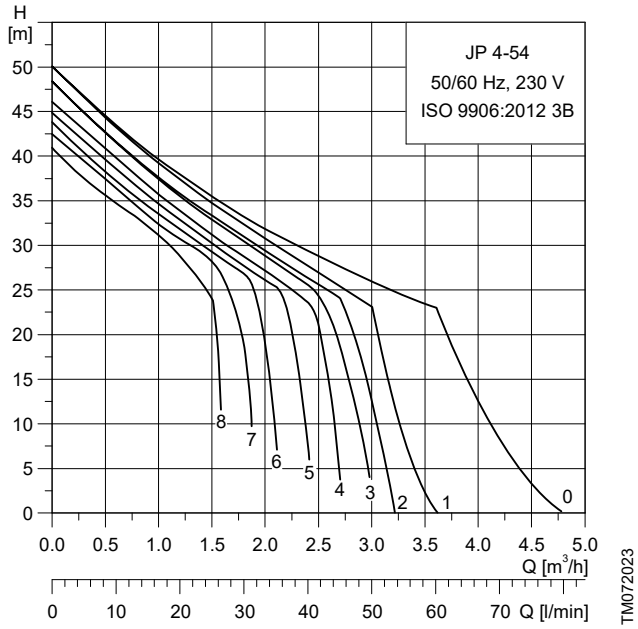

JP 4-54 performance curves for suction lifts of 0 to 8 m

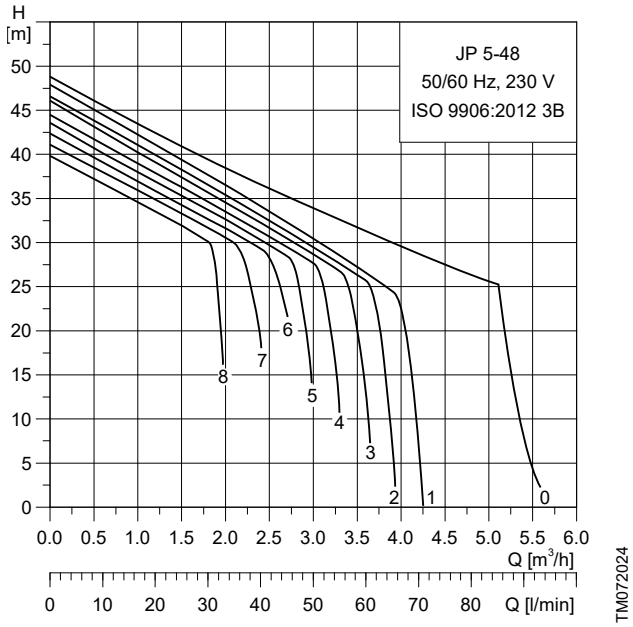

JP 5-48 performance curves for suction lifts of 0 to 8 m

Related information

Performance range

Technical data

Dimensions and weights

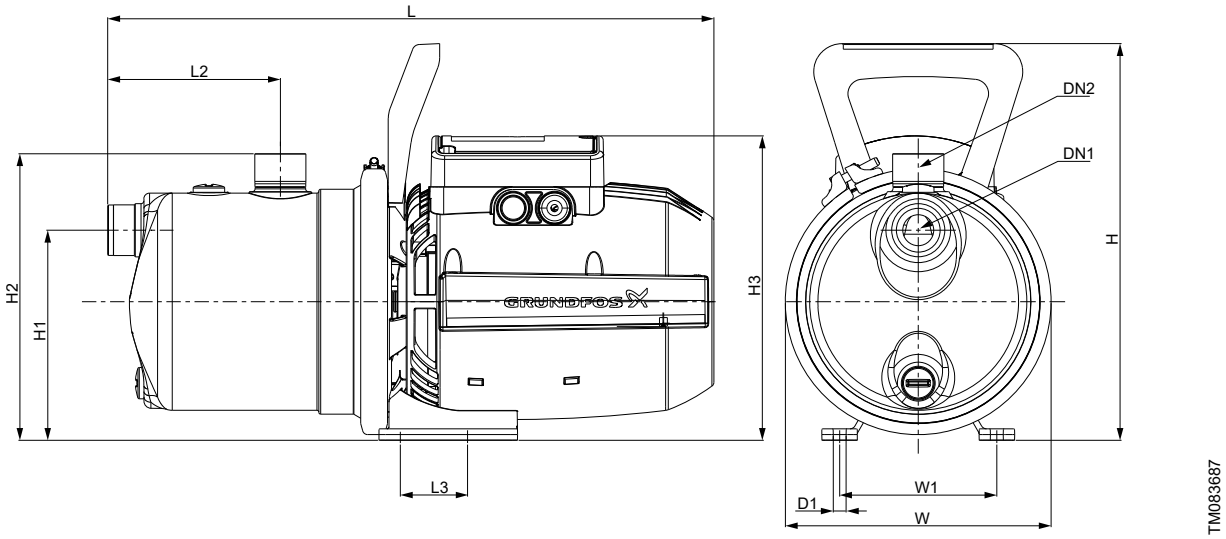

Pump type	L [mm]	L2 [mm]	L3 [mm]	H [mm]	H1 [mm]	H2 [mm]	H3 [mm]	W [mm]	W1 [mm]	D1 [mm]	DN1 [mm]	DN2 [mm]	Weight [kg]
JP 3-42	405	121	47	278	147	200	203	186	110	9	G1"	G1"	8.6
JP 3-42 IE2	405	121	47	278	147	200	203	186	110	9	G1"	G1"	10.0
JP 4-47	405	121	47	278	147	200	203	186	110	9	G1"	G1"	9.1
JP 4-47 IE2	405	121	47	278	147	200	203	186	110	9	G1"	G1"	10.0
JP 4-54	424	121	47	278	147	201	213	186	110	9	G1"	G1"	10.9
JP 4-54 IE2	424	121	47	278	147	201	213	186	110	9	G1"	G1"	12.4
JP 5-48	424	121	47	278	147	201	213	186	110	9	G1"	G1"	12.6
JP 5-48 IE2	440	121	47	278	147	201	213	186	110	9	G1"	G1"	13.6

Operating conditions

System pressure	Max. 6 bar / 0.60 MPa
Suction lift	Max. 8 m, including inlet-pipe pressure loss at a liquid temperature of 20 °C
Liquid temperature	S1 [1]: Max. 40 °C S3 [2]: Max. 60 °C
Ambient temperature	S1 [1]: 0-40 °C S3 [2]: 0-55 °C
Relative humidity	Max. 98 %
Enclosure class	IP44
Insulation class	F
Supply voltage	1 × 220-240 V, 50/60 Hz 1 × 115 V, 60 Hz
Start/stop frequency	Max. 20 per hour
Sound pressure level	Max. sound pressure level of the pump: JP 3-42: 68 dB(A) JP 4-47: 70 dB(A) JP 4-54: 74 dB(A) JP 5-48: 81 dB(A)

[1] S1 mode: The pump runs continuously.

[2] S3 mode: The pump runs in intermittent operation to cool down the motor.

Electrical data

50 Hz

Pump type	Voltage [V]	P1 [W (hp)]	P2 [W (hp)]	n [rpm]	I_n [A]	I_{start} [A]
JP 3-42	1 × 230	720 (0.97)	447 (0.60)	2800	3.1	9.2
JP 3-42 IE2	1 × 230	700 (0.94)	550 (0.74)	2850	3.2	13.2
JP 4-47	1 × 230	850 (1.14)	560 (0.75)	2800	3.8	11.3
JP 4-47 IE2	1 × 230	840 (1.12)	550 (0.74)	2800	3.9	13.2
JP 4-54	1 × 230	1130 (1.51)	746 (1.00)	2800	5.1	17.8
JP 4-54 IE2	1 × 230	1020 (1.36)	750 (1.00)	2840	4.5	18.4
JP 5-48	1 × 230	1490 (2.00)	1014 (1.36)	2800	6.6	27.9
JP 5-48 IE2	1 × 230	1390 (1.86)	1000 (1.34)	2870	6.1	28.4

60 Hz

Pump type	Voltage [V]	P1 [W (hp)]	P2 [W (hp)]	n [rpm]	I_n [A]	I_{start} [A]
JP 3-42	1 × 230	700 (0.93)	447 (0.60)	3400	3.1	11.3
	1 × 115	730 (0.98)	447 (0.60)	3400	6.6	22.4
JP 4-47	1 × 230	880 (1.18)	597 (0.80)	3400	3.8	12.5
	1 × 115	900 (1.21)	596 (0.80)	3400	8.0	26.3
JP 4-54	1 × 230	1100 (1.47)	746 (1.00)	3400	5.1	23.7
	1 × 115	1100 (1.47)	746 (1.00)	3400	9.7	47.5
JP 5-48	1 × 230	1450 (1.94)	1014 (1.36)	3400	6.6	38.2
	1 × 115	1470 (1.97)	1014 (1.36)	3400	13.4	58.3

Construction of JP pump

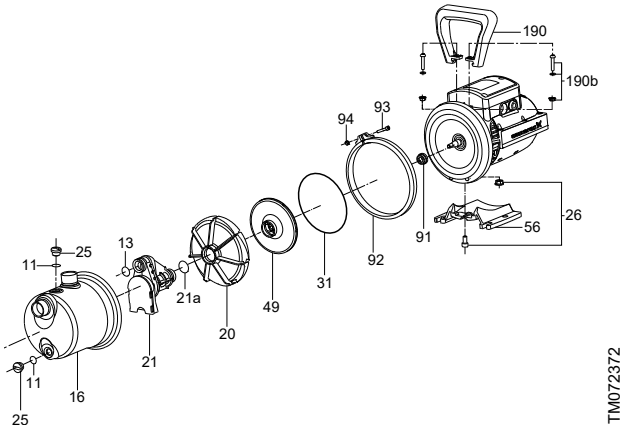

Exploded view of the JP pump

Material specification

Pos.	Component	Material
13	O-ring	NBR
16	Pump house	Stainless steel EN 1.4301, AISI 304
20	Diffuser	Composite
21	Venturi tube	Composite
21a	O-ring	NBR
25	Plug (filler)	Composite
26	Plug (drain)	Composite
31	O-ring	NBR
49	Impeller	Composite
56	Base plate	Aluminium
91	Shaft seal	Carbon with resin/ceramic + NBR + AISI 304 Type BBVP
92	Pump house ring	Stainless steel EN 1.4301, AISI 304
190	Handle	Composite

Approvals and markings

The product has the following approvals and markings:

ACS	CE		EAC

5. JP PM Booster

TM072465

Grundfos JP PM Booster provides the comfort of constant water pressure with automatic start and stop controlled according to consumption by the intelligent pressure manager. JP PM includes dry-running protection.

JP PM consists of a Grundfos JP pump and a Grundfos pressure manager. The PM START pressure manager is set to start at either 1.5 or 2.2 bar.

To reduce the number of starts and stops, an external Grundfos pressure tank can be installed.

Product range

Pump type	Max. flow rate [m^3/h]	Max. head [m]
JP 3-42	3	42
JP 4-47	4	47
JP 4-54	4	54
JP 5-48	5	48

Pressure manager

PM START is a pressure manager designed to start and stop the pump automatically according to the consumption. It starts the pump when the start pressure is reached, and the pump keeps running as long as there is flow.

TM083957

PM START

Motor

The motor is air cooled and equipped with oversized, sealed, greased-for-life ball bearings to ensure silent operation and minimum service.

Single-phase motors have a built-in thermal switch and require no additional motor protection.

Features and benefits

Features and benefits of the JP pump

- Self-priming, featuring a suction lift of up to 8 m
- robust design and corrosion-free materials for a long lifetime.

Features and benefits of the pressure manager

- Automatic start/stop according to consumption
- dry-running protection to avoid damage of the pump
- integrated non-return valve
- status indication: power on, pump running, alarm
- rotary outlet connection for easy adaption to local pipe system.

Self-priming

The self-priming function ensures a stable operation, even if the pump is not fully filled with liquid. The self-priming pump is able to lift liquid from below the inlet level and handle a mix of air and liquid until the pump reaches a fully-primed pumping condition.

Dry-running protection

PM START incorporates dry-running protection that automatically stops the pump from running without liquid to prevent damage to the pump.

If PM START does not detect any pressure or flow during priming within 8-10 seconds after being switched on, the dry-running alarm will be activated. The green indicator light will flash continuously. Press and hold the reset button until full priming is initiated.

Technical data

Dimensions and weights

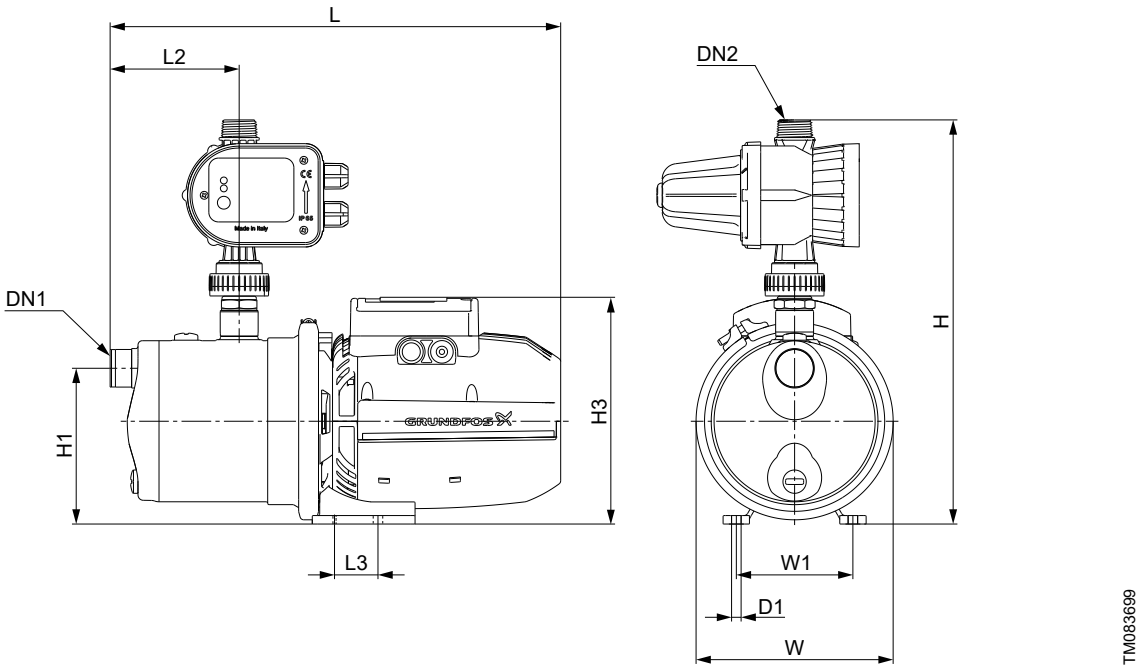

Pump type	L [mm]	L2 [mm]	L3 [mm]	H [mm]	H1 [mm]	H3 [mm]	W [mm]	W1 [mm]	D1 [mm]	DN1 [mm]	DN2 [mm]	Weight [kg]
JP 3-42	405	121	47	380	147	203	186	110	9	G1"	G1"	11.1
JP 3-42 IE2	405	121	47	380	147	203	186	110	9	G1"	G1"	15.0
JP 4-47	405	121	47	380	147	203	186	110	9	G1"	G1"	11.6
JP 4-47 IE2	405	121	47	380	147	203	186	110	9	G1"	G1"	15.0
JP 4-54	424	121	47	380	147	213	186	110	9	G1"	G1"	11.6
JP 4-54 IE2	424	121	47	380	147	213	186	110	9	G1"	G1"	21.0
JP 5-48	424	121	47	380	147	213	186	110	9	G1"	G1"	15.1
JP 5-48 IE2	440	121	47	380	147	213	186	110	9	G1"	G1"	19.0

Operating conditions

System pressure	Max. 6 bar / 0.60 MPa
Suction lift	Max. 8 m, including inlet-pipe pressure loss at a liquid temperature of 20 °C
Liquid temperature	S1 [3]: Max. 40 °C S3 [4]: Max. 60 °C
Ambient temperature	S1 [3]: 0-40 °C S3 [4]: 0-55 °C
Relative humidity	Max. 98 %
Enclosure class	IP44
Insulation class	F
Supply voltage	1 × 220-240 V, 50/60 Hz 1 × 115 V, 60 Hz
Start/stop frequency	Max. 20 per hour
Sound pressure level	Max. sound pressure level of the pump: JP 3-42: 68 [dB(A)] JP 4-47: 70 [dB(A)] JP 4-54: 74 [dB(A)] JP 5-48: 81 [dB(A)]
Min. flow rate [Q_{min}]	1 l/min

[3] S1 mode: The pump runs continuously.

[4] S3 mode: The pump runs in intermittent operation to cool down the motor.

Electrical data

50 Hz

Pump type	Voltage [V]	P1 [W (hp)]	P2 [W (hp)]	n [rpm]	I_n [A]	I_{start} [A]
JP 3-42 PM	1 × 230	720 (0.97)	447 (0.60)	2800	3.1	9.2
JP 3-42 PM IE2	1 × 230	700 (0.94)	550 (0.74)	2850	3.2	13.2
JP 4-47 PM	1 × 230	850 (1.14)	560 (0.75)	2800	3.8	11.3
JP 4-47 PM IE2	1 × 230	840 (1.12)	550 (0.74)	2800	3.9	13.2
JP 4-54 PM	1 × 230	1130 (1.51)	746 (1.00)	2800	5.1	17.8
JP 4-54 PM IE2	1 × 230	1020 (1.36)	750 (1.00)	2840	4.5	18.4
JP 5-48 PM	1 × 230	1490 (2.00)	1014 (1.36)	2800	6.6	27.9
JP 5-48 PM IE2	1 × 230	1390 (1.86)	1000 (1.34)	2870	6.1	28.4

60 Hz

Pump type	Voltage [V]	P1 [W (hp)]	P2 [W (hp)]	n [rpm]	I_n [A]	I_{start} [A]
JP 3-42 PM	1 × 230	700 (0.93)	447 (0.60)	3400	3.1	11.3
	1 × 115	730 (0.98)	447 (0.60)	3400	6.6	22.4
JP 4-47 PM	1 × 230	880 (1.18)	597 (0.80)	3400	3.8	12.5
	1 × 115	900 (1.21)	596 (0.80)	3400	8.0	26.3
JP 4-54 PM	1 × 230	1100 (1.47)	746 (1.00)	3400	5.1	23.7
	1 × 115	1100 (1.47)	746 (1.00)	3400	9.7	47.5
JP 5-48 PM	1 × 230	1450 (1.94)	1014 (1.36)	3400	6.6	38.2
	1 × 115	1470 (1.97)	1014 (1.36)	3400	13.4	58.3

Construction of JP PM Booster

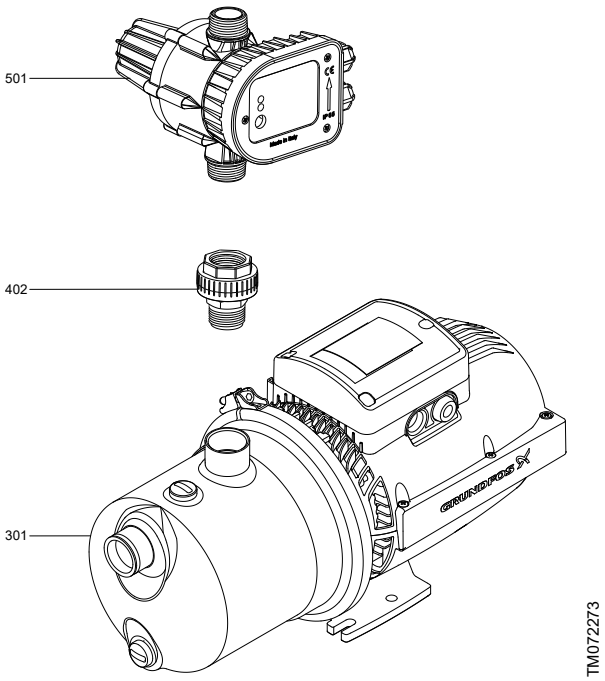

Material specification

Pos.	Description	Material
301	JP pump	-
402	Fitting	PA6 polyamide
501	Pressure manager	Wetted parts: • Body (PA6 GF30 %) • Flow valve/seat (UNI EN 12164 CW614N) • Diaphragm (EPDM) • Magnet (Strontium ferrite) • Non-return valve (PA6 GF 30 %) • Magnet cap/holder shaft (PA6 GF 30 %)

Approvals and markings

The product has the following approvals and markings:

ACS	CE		EAC

6. JP PT-V Booster

TM072467

Grundfos JP PT-V Booster provides the comfort of constant water pressure with automatic start and stop controlled by a pressure switch and pressure tank combined. The pressure tank limits the number of starts and stops, as water stored in the tank can be used without starting the pump in case of low water consumption or leakage loss. The cut-in pressure is set to 2.2 bar.

JP PT-V consists of a Grundfos JP pump, a pressure switch, a pressure tank and a pressure gauge. The tank is a Grundfos GT-H 18-litre vertical diaphragm tank.

Product range

Pump type	Max. flow rate [m^3/h]	Max. head [m]
JP 3-42	3	42
JP 4-47	4	47
JP 4-54	4	54
JP 5-48	5	48

Motor

The motor is air cooled and equipped with oversized, sealed, greased-for-life ball bearings to ensure silent operation and minimum service.

Single-phase motors have a built-in thermal switch and require no additional motor protection.

Features and benefits

Features and benefits of the JP pump

- Self-priming, featuring a suction lift of up to 8 m
- robust design and corrosion-free materials for a long lifetime.

Features and benefits of the pressure tank

- Automatic start/stop according to consumption
- controlled pressure for the comfort of constant water supply without pressure drops
- pressure gauge
- fewer starts and stops in case of low water consumption or leakage loss
- reduced water hammer in the pipes.

Self-priming

The self-priming function ensures a stable operation, even if the pump is not fully filled with liquid. The self-priming pump is able to lift liquid from below the inlet level and handle a mix of air and liquid until the pump reaches a fully-primed pumping condition.

Technical data

Dimensions and weights

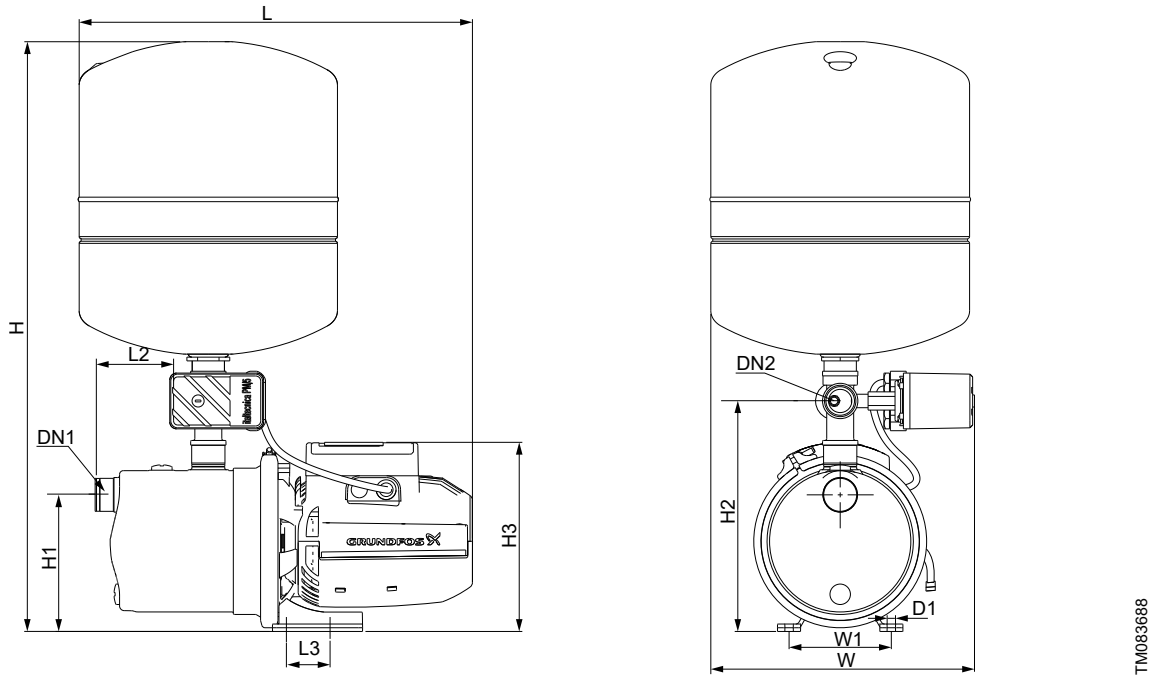

Pump type	L [mm]	L2 [mm]	L3 [mm]	H [mm]	H1 [mm]	H2 [mm]	H3 [mm]	W [mm]	W1 [mm]	D1 [mm]	DN1 [mm]	DN2 [mm]	Weight [kg]
JP 3-42 PT-V	423	85	47	635	147	248	203	284	110	9	G1"	G1"	15.3
JP 4-47 PT-V	423	85	47	635	147	248	203	284	110	9	G1"	G1"	15.8
JP 4-54 PT-V	442	84	47	634	147	248	213	284	110	9	G1"	G1"	17.6
JP 5-48 PT-V	442	84	47	634	147	248	213	284	110	9	G1"	G1"	19.3

Operating conditions

System pressure	Max. 6 bar / 0.60 MPa
Suction lift	Max. 8 m, including inlet-pipe pressure loss at a liquid temperature of 20 °C
Liquid temperature	S1 [1]: Max. 40 °C S3 [2]: Max. 60 °C
Ambient temperature	S1 [1]: 0-40 °C S3 [2]: 0-55 °C
Relative humidity	Max. 98 %
Enclosure class	IP44
Insulation class	F
Supply voltage	1 × 220-240 V, 50/60 Hz 1 × 115 V, 60 Hz
Start/stop frequency	Max. 20 per hour
Sound pressure level	Max. sound pressure level of the pump: JP 3-42: 68 dB(A) JP 4-47: 70 dB(A) JP 4-54: 74 dB(A) JP 5-48: 81 dB(A)

1) S1 mode: The pump runs continuously.

2) S3 mode: The pump runs in intermittent operation to cool down the motor.

Electrical data JP PT-V

50 Hz

Pump type	Voltage [V]	P1 [W (hp)]	P2 [W (hp)]	n [rpm]	I_n [A]	I_{start} [A]
JP 3-42 PT-V	1 × 230	720 (0.97)	447 (0.60)	2800	3.1	9.2
JP 4-47 PT-V	1 × 230	850 (1.14)	560 (0.75)	2800	3.8	11.3
JP 4-54 PT-V	1 × 230	1130 (1.51)	746 (1.00)	2800	5.1	17.8
JP 5-48 PT-V	1 × 230	1490 (2.00)	1014 (1.36)	2800	6.6	27.9

60 Hz

Pump type	Voltage [V]	P1 [W (hp)]	P2 [W (hp)]	n [rpm]	I_n [A]	I_{start} [A]
JP 3-42 PT-V	1 × 230	700 (0.93)	447 (0.60)	3400	3.1	11.3
	1 × 115	730 (0.98)	447 (0.60)	3400	6.6	22.4
JP 4-47 PT-V	1 × 230	880 (1.18)	597 (0.80)	3400	3.8	12.5
	1 × 115	900 (1.21)	596 (0.80)	3400	8.0	26.3
JP 4-54 PT-V	1 × 230	1100 (1.47)	746 (1.00)	3400	5.1	23.7
	1 × 115	1100 (1.47)	746 (1.00)	3400	9.7	47.5
JP 5-48 PT-V	1 × 230	1450 (1.94)	1014 (1.36)	3400	6.6	38.2
	1 × 115	1470 (1.97)	1014 (1.36)	3400	13.4	58.3

Construction of JP PT-V Booster

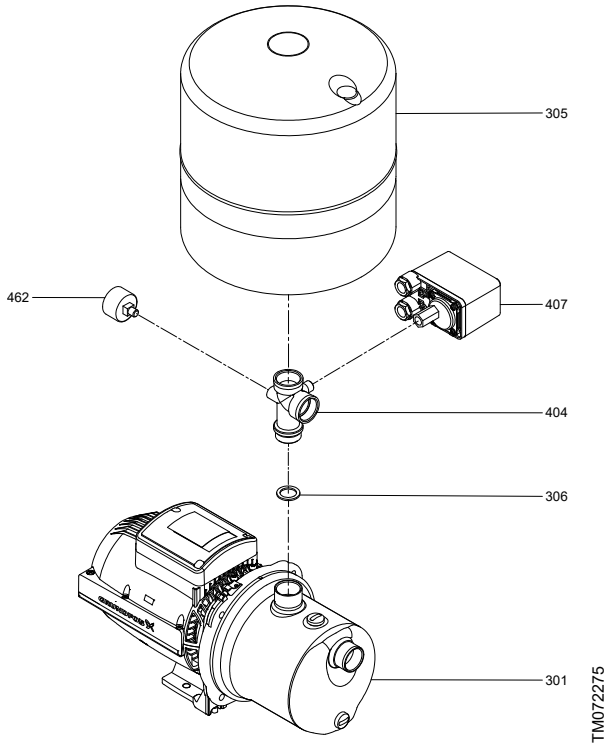

Material specification

Pos.	Description	Material
301	JP pump	-
305	Tank	Coated steel Wetted parts: Butyl Stainless steel (EN 1.4305)
404	5-way valve	Brass
405	Plug	Stainless steel
406	Gasket	Rubber
407	Pressure switch	Wetted parts: Rubber (NBR) Stainless steel (EN 1.4305) Brass
462	Manometer	-

Approvals and markings

The product has the following approvals and markings:

ACS	CE		EAC

7. JP PT-H Booster

TM072466

Grundfos JP PT-H Booster provides the comfort of constant water pressure with automatic start and stop controlled by a pressure switch and pressure tank combined. The pressure tank limits the number of starts and stops, as water stored in the tank can be used without starting the pump in case of low water consumption or leakage loss. The cut-in pressure is set to 2.2 bar.

JP PT-H consists of a Grundfos JP pump, a pressure switch, a pressure tank and a pressure gauge. The tank is a Grundfos GT-H 20-litre or 60-litre horizontal diaphragm tank.

Product range

Pump type	Max. flow rate [m^3/h]	Max. head [m]
JP 3-42	3	42
JP 4-47	4	47
JP 4-54	4	54
JP 5-48	5	48

Motor

The motor is air cooled and equipped with oversized, sealed, greased-for-life ball bearings to ensure silent operation and minimum service.

Single-phase motors have a built-in thermal switch and require no additional motor protection.

Features and benefits

Features and benefits of the JP pump

- Self-priming, featuring a suction lift of up to 8 m
- robust design and corrosion-free materials for a long lifetime.

Features and benefits of the pressure tank

- Automatic start/stop according to consumption
- controlled pressure for the comfort of constant water supply without pressure drops
- pressure gauge
- fewer starts and stops in case of low water consumption or leakage loss
- reduced water hammer in the pipes.

Self-priming

The self-priming function ensures a stable operation, even if the pump is not fully filled with liquid. The self-priming pump is able to lift liquid from below the inlet level and handle a mix of air and liquid until the pump reaches a fully-primed pumping condition.

Technical data

Dimensions and weights

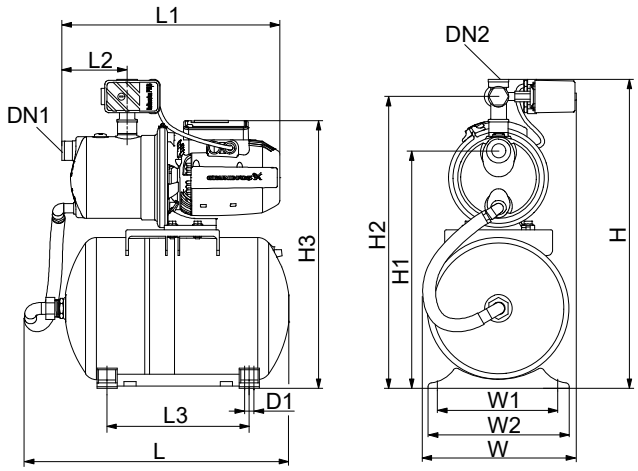

Pump type	L [mm]	L1 [mm]	L2 [mm]	L3 [mm]	H [mm]	H1 [mm]	H2 [mm]	H3 [mm]	W [mm]	W1 [mm]	D1 [mm]	DN1 [mm]	DN2 [mm]	Weight [kg]
JP 3-42 PT-H	493	405	120	265	576	443	544	499	284	230	10	G1"	G1"	16.2
JP 3-42 PT-H IE2	493	405	120	265	576	443	544	499	284	230	10	G1"	G1"	18.0
JP 4-47 PT-H	493	405	120	265	576	443	544	499	284	230	10	G1"	G1"	16.7
JP 4-47 PT-H IE2	493	405	120	265	576	443	544	499	284	230	10	G1"	G1"	19.0
JP 4-47 PT-H (60L)	577	405	120	302	703	570	671	626	389	236	11	G1"	G1"	32.0
JP 4-54 PT-H	493	423	120	265	577	443	545	509	286	230	10	G1"	G1"	18.5
JP 4-54 PT-H IE2	493	423	120	265	577	443	545	509	286	230	10	G1"	G1"	22.0
JP 5-48 PT-H	493	423	120	265	577	443	545	509	286	230	10	G1"	G1"	20.2
JP 5-48 PT-H IE2	493	441	120	265	577	443	545	509	286	230	10	G1"	G1"	23.0
JP 5-48 PT-H (60L)	577	424	120	302	703	570	671	636	289	236	11	G1"	G1"	28.0

Operating conditions

System pressure	Max. 6 bar / 0.60 MPa
Suction lift	Max. 8 m, including inlet-pipe pressure loss at a liquid temperature of 20 °C
Liquid temperature	S1 [1]: Max. 40 °C S3 [2]: Max. 60 °C
Ambient temperature	S1 [1]: 0-40 °C S3 [2]: 0-55 °C
Relative humidity	Max. 98 %
Enclosure class	IP44
Insulation class	F
Supply voltage	1 × 220-240 V, 50/60 Hz 1 × 115 V, 60 Hz
Start/stop frequency	Max. 20 per hour
Sound pressure level	Max. sound pressure level of the pump: JP 3-42: 68 dB(A) JP 4-47: 70 dB(A) JP 4-54: 74 dB(A) JP 5-48: 81 dB(A)

[1] S1 mode: The pump runs continuously.

[2] S3 mode: The pump runs in intermittent operation to cool down the motor.

Electrical data JP PT-H

50 Hz

Pump type	Voltage [V]	P1 [W (hp)]	P2 [W (hp)]	n [rpm]	I_n [A]	I_{start} [A]
JP 3-42 PT-H	1 × 230	720 (0.97)	447 (0.60)	2800	3.1	9.2
JP 3-42 PT-H IE2	1 × 230	700 (0.94)	550 (0.74)	2850	3.2	13.2
JP 4-47 PT-H	1 × 230	850 (1.14)	560 (0.75)	2800	3.8	11.3
JP 4-47 PT-H IE2	1 × 230	840 (1.12)	550 (0.74)	2800	3.9	13.2
JP 4-54 PT-H	1 × 230	1130 (1.51)	746 (1.00)	2800	5.1	17.8
JP 4-54 PT-H IE2	1 × 230	1020 (1.36)	750 (1.00)	2840	4.5	18.4
JP 5-48 PT-H	1 × 230	1490 (2.00)	1014 (1.36)	2800	6.6	27.9
JP 5-48 PT-H IE2	1 × 230	1390 (1.86)	1000 (1.34)	2870	6.1	28.4

60 Hz

Pump type	Voltage [V]	P1 [W (hp)]	P2 [W (hp)]	n [rpm]	I_n [A]	I_{start} [A]
JP 3-42 PT-H	1 × 230	700 (0.93)	447 (0.60)	3400	3.1	11.3
	1 × 115	730 (0.98)	447 (0.60)	3400	6.6	22.4
JP 4-47 PT-H	1 × 230	880 (1.18)	597 (0.80)	3400	3.8	12.5
	1 × 115	900 (1.21)	596 (0.80)	3400	8.0	26.3
JP 4-54 PT-H	1 × 230	1100 (1.47)	746 (1.00)	3400	5.1	23.7
	1 × 115	1100 (1.47)	746 (1.00)	3400	9.7	47.5
JP 5-48 PT-H	1 × 230	1450 (1.94)	1014 (1.36)	3400	6.6	38.2
	1 × 115	1470 (1.97)	1014 (1.36)	3400	13.4	58.3

Construction of JP PT-H Booster

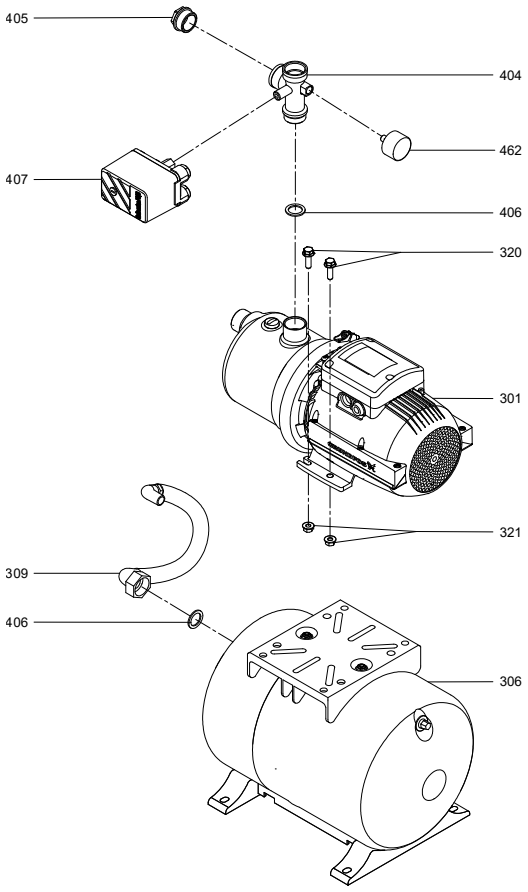

TM072274

Material specification

Pos.	Description	Material
301	JP pump	-
306	Tank	Coated steel Wetted parts: Butyl Stainless steel (EN 1.4305)
309	Hose	Rubber (EPDM)
404	5-way valve	Brass
405	Plug	Stainless steel (EN 1.4305)
406	Gasket	Stainless steel (EN 1.4305)
407	Pressure switch	Wetted parts: Rubber (NBR) Stainless steel (EN 1.4305) Brass
462	Manometer	-

Approvals and markings

The product has the following approvals and markings:

ACS	CE	EAC

8. Product numbers

Guide to read the product-number tables

Abbreviation	Description
JP	Pump
JP PM	Pump with pressure manager
JP PT-V	Pump with 18-litre vertical pressure tank
JP PT-H	Pump with 20-litre or 60-litre horizontal pressure tank

When reading the product-number tables, refer to the table above for abbreviations and definitions.

JP

50 Hz

Pump model	Voltage	Plug type	Thread	Country of origin	Product number
JP 3-42	1 × 230 V 50 Hz	Schuko	G1	Hungary	99458766
JP 4-47	1 × 230 V 50 Hz	Schuko	G1	Hungary	99458767
JP 4-54	1 × 230 V 50 Hz	Schuko	G1	Hungary	99458768
JP 5-48	1 × 230 V 50 Hz	Schuko	G1	Hungary	99458769
JP 4-54	1 × 230 V 50 Hz	Type G	G1	Hungary	99458789
JP 5-48	1 × 230 V 50 Hz	Type G	G1	Hungary	99458790
JP 3-42	1 × 230 V 50 Hz	Type I	G1	China	99458782
JP 4-47	1 × 230 V 50 Hz	Type I	G1	China	99458783
JP 4-54	1 × 230 V 50 Hz	Type I	G1	China	99458784
JP 5-48	1 × 230 V 50 Hz	Type I	G1	China	99458785
JP 3-42	1 × 230 V 50 Hz	Cable only	G1	Hungary	99458791
JP 4-47	1 × 230 V 50 Hz	Cable only	G1	Hungary	99458792
JP 4-54	1 × 230 V 50 Hz	Cable only	G1	Hungary	99458793
JP 5-48	1 × 230 V 50 Hz	Cable only	G1	Hungary	99458794
JP 3-42	1 × 230 V 50 Hz	No cable	G1	Hungary	99458823
JP 4-47	1 × 230 V 50 Hz	No cable	G1	Hungary	99458824
JP 4-54	1 × 230 V 50 Hz	No cable	G1	Hungary	99458825
JP 5-48	1 × 230 V 50 Hz	No cable	G1	Hungary	99458826

60 Hz

Pump model	Voltage	Plug type	Thread	Country of origin	Product number
JP 3-42 ARB [5)]	1 × 230 V 60 Hz	Cable only	G1	Hungary	99458811
JP 4-47 ARB [5)]	1 × 230 V 60 Hz	Cable only	G1	Hungary	99458812
JP 4-54 ARB [5)]	1 × 230 V 60 Hz	Cable only	G1	Hungary	99458813
JP 5-48 ARB [5)]	1 × 230 V 60 Hz	Cable only	G1	Hungary	99458814

5) Printed installation and operating instructions in English (UK) and Arabic are included.

JP PM

50 Hz

Pump model	Voltage	Plug type	Thread	Country of origin	Product number
JP 3-42 PM START	1 × 230 V 50 Hz	AUS	G1	China	93294032
JP 4-47 PM START	1 × 230 V 50 Hz	AUS	G1	China	93294039
JP 4-54 PM START	1 × 230 V 50 Hz	AUS	G1	China	93294062
JP 5-48 PM START	1 × 230 V 50 Hz	AUS	G1	China	93294136
JP 3-42 PM START	1 × 230 V 50 Hz	Schuko	G1	Hungary	93294160
JP 4-47 PM START	1 × 230 V 50 Hz	Schuko	G1	Hungary	93294161
JP 4-54 PM START	1 × 230 V 50 Hz	Schuko	G1	Hungary	93294164
JP 5-48 PM START	1 × 230 V 50 Hz	Schuko	G1	Hungary	93294166

JP PT-V

50 Hz

Pump model	Voltage	Plug type	Thread	Country of origin	Product number
JP 3-42 PT-V SNI [6)]	1 × 230 V 50 Hz	Schuko	G1	China	99463878
JP 4-47 PT-V SNI [6)]	1 × 230 V 50 Hz	Schuko	G1	China	99463879
JP 4-54 PT-V SNI [6)]	1 × 230 V 50 Hz	Schuko	G1	China	99463880
JP 5-48 PT-V SNI [6)]	1 × 230 V 50 Hz	Schuko	G1	China	99463881
JP 3-42 PT-V	1 × 230 V 50 Hz	Type I	G1	China	99463894
JP 4-47 PT-V	1 × 230 V 50 Hz	Type I	G1	China	99463895
JP 4-54 PT-V	1 × 230 V 50 Hz	Type I	G1	China	99463896
JP 5-48 PT-V	1 × 230 V 50 Hz	Type I	G1	China	99463897

6) Warranty card for Indonesia is included.

JP PT-H

50 Hz

Pump model	Voltage	Plug type	Thread	Country of origin	Product number
JP 3-42 PT-H	1 × 230 V 50 Hz	Schuko	G1	Hungary	99463874
JP 4-47 PT-H	1 × 230 V 50 Hz	Schuko	G1	Hungary	99463875
JP 4-47 PT-H [7)]	1 × 230 V 50 Hz	Schuko	G1	Hungary	99594664
JP 4-54 PT-H	1 × 230 V 50 Hz	Schuko	G1	Hungary	99463876
JP 5-48 PT-H	1 × 230 V 50 Hz	Schuko	G1	Hungary	99463877
JP 5-48 PT-H [7)]	1 × 230 V 50 Hz	Schuko	G1	Hungary	99594666
JP 3-42 PT-H	1 × 230 V 50 Hz	Type G	G1	Hungary	99463910

7) Variant has 60L tank

9. Grundfos Product Center

Online search and sizing tool to help you make the right choice.
From the international view, you can select your specific country to view the product range available to you.
International view: *http://product-selection.grundfos.com*

All the information you need in one place

Performance curves, technical specifications, pictures, dimensional drawings, motor curves, wiring diagrams, spare parts, service kits, 3D drawings, documents, system parts. The Product Center displays any recent and saved items - including complete projects - right on the main page.

Downloads

On the product pages, you can download installation and operating instructions, data booklets, service instructions, etc., in PDF format.

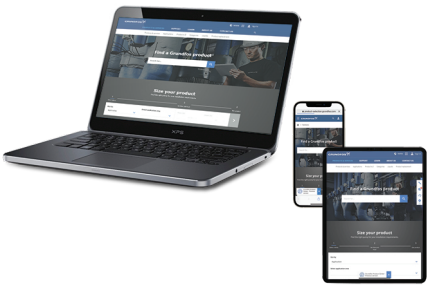

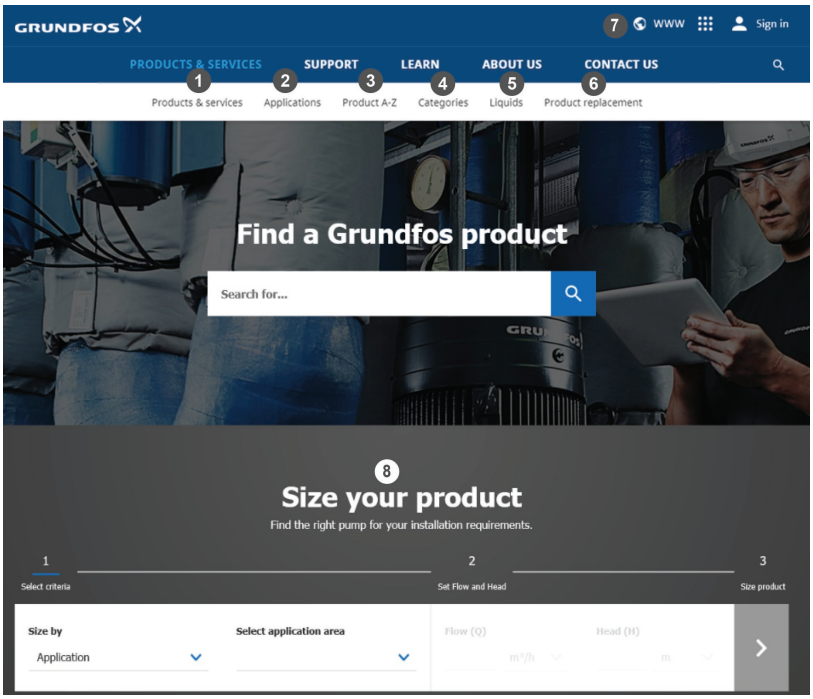

When you select your country, you will see the menus below. Note that some menus may not be available depending on the country.
Example: *https://product-selection.grundfos.com/uk*

Pos.	Description
1	**Products & services** enables you to find products and documents by typing a product number or name into the search field.
2	**Applications** enables you to choose an application to see how Grundfos can help you design and optimise your system.
3	**Products A-Z** enables you to look through a list of all the Grundfos products.
4	**Categories** enables you to look for a product category.
5	**Liquids** enables you to find pumps designed for aggressive, flammable or other special liquids.
6	**Product replacement** enables you to find a suitable replacement.
7	**WWW** enables you to select the country, which changes the language, the available product range and the structure of the website.
8	**Sizing** enables you to size a product based on your application and operating conditions.

10. Document quality feedback

To provide feedback about this document, scan the QR code using your phone's camera or a QR code app.

FEEDBACK99520366

Click here to submit your feedback

Argentina
Bombas GRUNDFOS de Argentina S.A.
Ruta Panamericana km. 37.500industin
1619 - Garín Pcia. de B.A.
Tel.: +54-3327 414 444
Fax: +54-3327 45 3190

Australia
GRUNDFOS Pumps Pty. Ltd.
P.O. Box 2040
Regency Park
South Australia 5942
Tel.: +61-8-8461-4611
Fax: +61-8-8340-0155

Austria
GRUNDFOS Pumpen Vertrieb Ges.m.b.H.
Grundfosstraße 2
A-5082 Grödig/Salzburg
Tel.: +43-6246-883-0
Fax: +43-6246-883-30

Belgium
N.V. GRUNDFOS Bellux S.A.
Boomsesteenweg 81-83
B-2630 Aartselaar
Tel.: +32-3-870 7300
Fax: +32-3-870 7301

Bosnia and Herzegovina
GRUNDFOS Sarajevo
Zmaja od Bosne 7-7A
BiH-71000 Sarajevo
Tel.: +387 33 592 480
Fax: +387 33 590 465
www.ba.grundfos.com
E-mail: grundfos@bih.net.ba

Brazil
BOMBAS GRUNDFOS DO BRASIL
Av. Humberto de Alencar Castelo Branco, 630
CEP 09850 - 300
São Bernardo do Campo - SP
Tel.: +55-11 4393 5533
Fax: +55-11 4343 5015

Bulgaria
Grundfos Bulgaria EOOD
Slatina District
Iztochna Tangenta street no. 100
BG - 1592 Sofia
Tel.: +359 2 49 22 200
Fax: +359 2 49 22 201
E-mail: bulgaria@grundfos.bg

Canada
GRUNDFOS Canada inc.
2941 Brighton Road
Oakville, Ontario
L6H 6C9
Tel.: +1-905 829 9533
Fax: +1-905 829 9512

China
GRUNDFOS Pumps (Shanghai) Co. Ltd.
10F The Hub, No. 33 Suhong Road
Minhang District
Shanghai 201106 PRC
Tel.: +86 21 612 252 22
Fax: +86 21 612 253 33

Colombia
GRUNDFOS Colombia S.A.S.
Km 1.5 vía Siberia-Cota Conj. Potrero Chico,
Parque Empresarial Arcos de Cota Bod. 1A.
Cota, Cundinamarca
Tel.: +57(1)-2913444
Fax: +57(1)-8764586

Croatia
GRUNDFOS CROATIA d.o.o.
Buzinski prilaz 38, Buzin
HR-10010 Zagreb
Tel.: +385 1 6595 400
Fax: +385 1 6595 499
www.hr.grundfos.com

Czech Republic
GRUNDFOS Sales Czechia and Slovakia s.r.o.
Čajkovského 21
779 00 Olomouc
Tel.: +420-585-716 111

Denmark
GRUNDFOS DK A/S
Martin Bachs Vej 3
DK-8850 Bjerringbro
Tel.: +45-87 50 50 50
Fax: +45-87 50 51 51
E-mail: info_GDK@grundfos.com
www.grundfos.com/DK

Estonia
GRUNDFOS Pumps Eesti OÜ
Peterburi tee 92G
11415 Tallinn
Tel.: + 372 606 1690
Fax: + 372 606 1691

Finland
OY GRUNDFOS Pumput AB
Trukkikuja 1
FI-01360 Vantaa
Tel.: +358-(0) 207 889 500

France
Pompes GRUNDFOS Distribution S.A.
Parc d'Activités de Chesnes
57, rue de Malacombe
F-38290 St. Quentin Fallavier (Lyon)
Tel.: +33-4 74 82 15 15
Fax: +33-4 74 94 10 51

Germany
GRUNDFOS GMBH
Schlüterstr. 33
40699 Erkrath
Tel.: +49-(0) 211 929 69-0
Fax: +49-(0) 211 929 69-3799
E-mail: infoservice@grundfos.de
Service in Deutschland:
kundendienst@grundfos.de

Greece
GRUNDFOS Hellas A.E.B.E.
20th km. Athinon-Markopoulou Av.
P.O. Box 71
GR-19002 Peania
Tel.: +0030-210-66 83 400
Fax: +0030-210-66 46 273

Hong Kong
GRUNDFOS Pumps (Hong Kong) Ltd.
Unit 1, Ground floor, Siu Wai industrial Centre
29-33 Wing Hong Street & 68 King Lam Street, Cheung Sha Wan
Kowloon
Tel.: +852-27861706 / 27861741
Fax: +852-27858664

Hungary
GRUNDFOS South East Europe Kft.
Tópark u. 8
H-2045 Törökbálint
Tel.: +36-23 511 110
Fax: +36-23 511 111

India
GRUNDFOS Pumps India Private Limited
118 Old Mahabalipuram Road
Thoraipakkam
Chennai 600 097
Tel.: +91-44 2496 6800

Indonesia
PT GRUNDFOS Pompa
Graha intirub Lt. 2 & 3
Jln. Cililitan Besar No.454. Makasar, Jakarta Timur
ID-Jakarta 13650
Tel.: +62 21-469-51900
Fax: +62 21-460 6910 / 460 6901

Ireland
GRUNDFOS (Ireland) Ltd.
Unit A, Merrywell Business Park
Ballymount Road Lower
Dublin 12
Tel.: +353-1-4089 800
Fax: +353-1-4089 830

Italy
GRUNDFOS Pompe Italia S.r.l.
Via Gran Sasso 4
I-20060 Truccazzano (Milano)
Tel.: +39-02-95838112
Fax: +39-02-95309290 / 95838461

Japan
GRUNDFOS Pumps K.K.
1-2-3, Shin-Miyakoda, Kita-ku
Hamamatsu
431-2103 Japan
Tel.: +81 53 428 4760
Fax: +81 53 428 5005

Kazakhstan
Grundfos Kazakhstan LLP
7' Kyz-Zhibek Str., Kok-Tobe micr.
KZ-050020 Almaty Kazakhstan
Tel.: +7 (727) 227-98-55/56

Korea
GRUNDFOS Pumps Korea Ltd.
6th Floor, Aju Building 679-5
Yeoksam-dong, Kangnam-ku, 135-916
Seoul, Korea
Tel.: +82-2-5317 600
Fax: +82-2-5633 725

Latvia
SIA GRUNDFOS Pumps Latvia
Deglava biznesa centrs
Augusta Deglava ielā 60
LV-1035, Rīga,
Tel.: + 371 714 9640, 7 149 641
Fax: + 371 914 9646

Lithuania
GRUNDFOS Pumps UAB
Smolensko g. 6
LT-03201 Vilnius
Tel.: + 370 52 395 430
Fax: + 370 52 395 431

Malaysia
GRUNDFOS Pumps Sdn. Bhd.
7 Jalan Peguam U1/25
Glenmarie industrial Park
40150 Shah Alam, Selangor
Tel.: +60-3-5569 2922
Fax: +60-3-5569 2866

Mexico
Bombas GRUNDFOS de México S.A. de C.V.
Boulevard TLC No. 15
Parque industrial Stiva Aeropuerto
Apodaca, N.L. 66600
Tel.: +52-81-8144 4000
Fax: +52-81-8144 4010

Netherlands
GRUNDFOS Netherlands
Veluwezoom 35
1326 AE Almere
Postbus 22015
1302 CA ALMERE
Tel.: +31-88-478 6336
Fax: +31-88-478 6332
E-mail: info_gnl@grundfos.com

New Zealand
GRUNDFOS Pumps NZ Ltd.
17 Beatrice Tinsley Crescent
North Harbour Industrial Estate
Albany, Auckland
Tel.: +64-9-415 3240
Fax: +64-9-415 3250

Norway
GRUNDFOS Pumper A/S
Strømsveien 344
Postboks 235, Leirdal
N-1011 Oslo
Tel.: +47-22 90 47 00
Fax: +47-22 32 21 50

Poland
GRUNDFOS Pompy Sp. z o.o.
ul. Klonowa 23
Baranowo k. Poznania
PL-62-081 Przeźmierowo
Tel.: (+48-61) 650 13 00
Fax: (+48-61) 650 13 50

Portugal
Bombas GRUNDFOS Portugal, S.A.
Rua Calvet de Magalhães, 241
Apartado 1079
P-2770-153 Paço de Arcos
Tel.: +351-21-440 76 00
Fax: +351-21-440 76 90

Romania
GRUNDFOS Pompe România SRL
S-PARK BUSINESS CENTER, Clădirea A2, etaj 2
Str. Tipografilor, Nr. 11-15, Sector 1, Cod 013714
Bucuresti, Romania
Tel.: 004 021 2004 100
E-mail: romania@grundfos.ro

Serbia
Grundfos Srbija d.o.o.
Omladinskih brigada 90b
11070 Novi Beograd
Tel.: +381 11 2258 740
Fax: +381 11 2281 769
www.rs.grundfos.com

Singapore
GRUNDFOS (Singapore) Pte. Ltd.
25 Jalan Tukang
Singapore 619264
Tel.: +65-6681 9688
Faxax: +65-6681 9689

Slovakia
GRUNDFOS s.r.o.
Prievozská 4D 821 09 BRATISLAVA
Tel.: +421 2 5020 1426
sk.grundfos.com

Slovenia
GRUNDFOS LJUBLJANA, d.o.o.
Leskoškova 9e, 1122 Ljubljana
Tel.: +386 (0) 1 568 06 10
Fax: +386 (0)1 568 06 19
E-mail: tehnika-si@grundfos.com

South Africa
GRUNDFOS (PTY) LTD
16 Lascelles Drive, Meadowbrook Estate
1609 Germiston, Johannesburg
Tel.: (+27) 10 248 6000
Fax: (+27) 10 248 6002
E-mail: lgradidge@grundfos.com

Spain
Bombas GRUNDFOS España S.A.
Camino de la Fuentecilla, s/n
E-28110 Algete (Madrid)
Tel.: +34-91-848 8800
Fax: +34-91-628 0465

Sweden
GRUNDFOS AB
Box 333 (Lunnagårdsgatan 6)
431 24 Mölndal
Tel.: +46 31 332 23 000
Fax: +46 31 331 94 60

Switzerland
GRUNDFOS Pumpen AG
Bruggacherstrasse 10
CH-8117 Fällanden/ZH
Tel.: +41-44-806 8111
Fax: +41-44-806 8115

Taiwan
GRUNDFOS Pumps (Taiwan) Ltd.
7 Floor, 219 Min-Chuan Road
Taichung, Taiwan, R.O.C.
Tel.: +886-4-2305 0868
Fax: +886-4-2305 0878

Thailand
GRUNDFOS (Thailand) Ltd.
92 Chaloem Phrakiat Rama 9 Road
Dokmai, Pravej, Bangkok 10250
Tel.: +66-2-725 8999
Fax: +66-2-725 8998

Turkey
GRUNDFOS POMPA San. ve Tic. Ltd. Sti.
Gebze Organize Sanayi Bölgesi
Ihsan dede Caddesi
2. yol 200. Sokak No. 204
41490 Gebze/ Kocaeli
Tel.: +90 - 262-679 7979
Fax: +90 - 262-679 7905
E-mail: satis@grundfos.com

Ukraine
ТОВ "ГРУНДФОС УКРАЇНА"
Бізнес Центр Європа
Столичне шосе, 103
м. Київ, 03131, Україна
Tel.: (+38 044) 237 04 00
Fax: (+38 044) 237 04 01
E-mail: ukraine@grundfos.com

United Arab Emirates
GRUNDFOS Gulf Distribution
P.O. Box 16768
Jebel Ali Free Zone, Dubai
Tel.: +971 4 8815 166
Fax: +971 4 8815 136

United Kingdom
GRUNDFOS Pumps Ltd.
Grovebury Road
Leighton Buzzard/Beds. LU7 4TL
Tel.: +44-1525-850000
Fax: +44-1525-850011

U.S.A.
Global Headquarters for WU
856 Koomey Road
Brookshire, Texas 77423 USA
Phone: +1-630-236-5500

Uzbekistan
Grundfos Tashkent, Uzbekistan
The Representative Office of Grundfos Kazakhstan in Uzbekistan
38a, Oybek street, Tashkent
Tel.: (+998) 71 150 3290 / 71 150 3291
Fax: (+998) 71 150 3292

© 2025 Grundfos Holding A/S, all rights reserved.

Trademarks displayed in this material, including but not limited to Grundfos and the Grundfos logo, are registered trademarks owned by The Grundfos Group.

99520366 **03.2025**

ECM: 1415658

GRUNDFOS Holding A/S
Poul Due Jensens Vej 7
DK-8850 Bjerringbro
Tel: +45 87 50 14 00
www.grundfos.com

GRUNDFOS