Data booklet

COMFORT

Circulator pumps for hot-water recirculation

115/230 V, 50/60 Hz

GRUNDFOS

Table of contents

1. Product description 3
Performance range 3
Features 4
Applications 5

2. Product numbers 6
COMFORT international, DACH, GB, CN, 1×230 V, 50/60 Hz 6
COMFORT, North America, 1×115-230 V, 60 Hz . . . 7
Type key 8

3. Control modes 9
Continuous operation 24/7 9
Temperature control 9
Temperature+ control 9
Timer. 10
AUTOADAPT 10

4. Construction. 12
Stator 12
Electrical insulation 12
Rotor and impeller. 12
Bearing pin and bearing ball 12
Separator. 12
Pump housing 13
Union nut 13
Vent screw 13
Seal ring 13
Exploded drawings 14
Material specification 15

5. Operating conditions 16
Technical data 16
Installation requirement 16

6. Performance curves. 17
Curve conditions 17
Data sheets 18

7. Accessories 39
Union sets and valves for COMFORT international variants 39
Union sets and valves for COMFORT North American variants 39
Miscellaneous 40
Spare parts 40

8. Grundfos Product Center 41

9. Document quality feedback. 42

1. Product description

COMFORT TA (upper left) and COMFORT XL

COMFORT pumps are efficient circulator pumps designed for hot-water recirculation in residential buildings with a dedicated return line. The pumps are compatible with all types of water heater tanks, tankless systems, solar and heat pumps regardless of whether the system has mixing or tampering valves installed.

The hydraulic performance of COMFORT pumps makes them an easy choice for small and middle-size private homes. The COMFORT XL variant is suitable for properties with higher heat loss, such as multifamily houses or private homes with uninsulated pipes. The pump parts exposed to contact with water are made of brass, stainless steel and composite materials to prevent corrosion which is crucial for hot-water recirculation applications. The design of the impeller allows COMFORT to be used with water of any hardness. The built-in dry-running protection prevents pump failure if the system runs out of water.

Thanks to its modern permanent-magnet motor, COMFORT operates quietly and uses no more than 7 watts (12 watts for the COMFORT XL variant). The COMFORT range offers variants with smart control modes that optimize operating periods to reduce system heat loss.

The pumps are supplied with a power plug that matches the local standard, depending on the region, and are also available in variants with supplied or built-in shut-off or check valves.

Scan the QR code below to access Grundfos Ecademy and learn more about COMFORT.

TM087391

Related information

COMFORT international, DACH, GB, CN, 1×230 V, 50/60 Hz

COMFORT, North America, 1×115-230 V, 60 Hz

Performance range

International product range

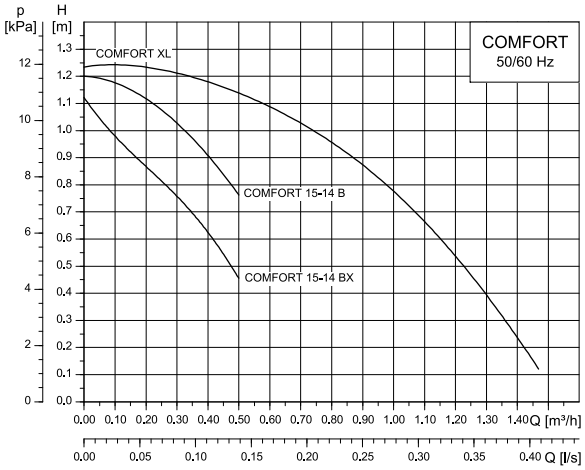

COMFORT performance range

North American product range

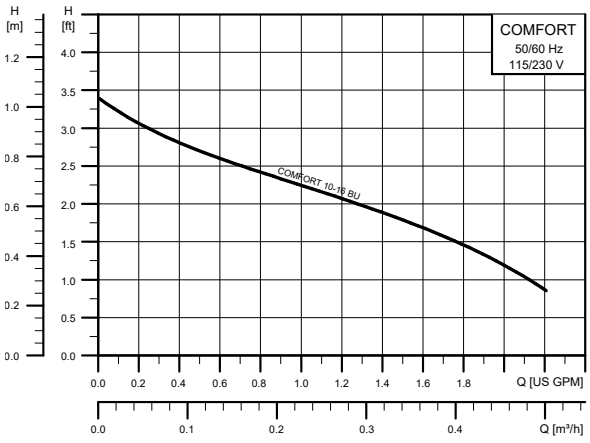

COMFORT NA performance range

Features

COMFORT features:

- Q-H performance that is designed for single- and multifamily houses, depending on the required duty point to accommodate for heat loss in specific pipe layout.
- Low power consumption and silent operation.
- Compliance with pipe manufacturers' flow velocity limits, including DN 15, DN 20 PEX, copper, and others.
- Drinking-water approved, ensured by the brass pump housing, stainless-steel rotor and composite impeller.
- Designed to make cleaning limescale and foreign deposits easy by removing the pump head, enabling the product to meet the unlimited water hardness requirement.
- Dry-running protection to prevent failure if the system runs out of water.
- Multiple installation positions, even with the pump head pointing downwards.
- A pump head designed to fit all brass pump housings of the same design from different brands (such as Wilo, VORTEX, Lowara and DAB). The design enables easy installation and removes the need to replace the pump housing and drain the system.
- Easy electrical installation provided by a pre-assembled power plug with a 1.6 m (5.2 ft) cable or detachable COMFORT plug, and a double insulation protection, eliminating the need for a ground wire.
- Insulating shell for reduced heat loss.
- Shut-off and non-return valves included in BX variants, reducing installation cost.
- An optional venting flange, providing a simple solution to vent or drain the system without permanently installing an additional vent valve.
- Optional fittings for pipe connections in different sizes and types are available.
- Optional shut-off and non-return valves.

COMFORT XL features:

- Q-H performance that is designed for multifamily houses with higher flow demand (up to 1.5 m^3/h).
- 140 mm port-to-port length and G 1 pipe connection, offering easy replacement of Wilo Star-Z 20/1.
- 1/4" air-vent (drain) screw integrated on the pump housing, enabling faster setup and reducing installation cost.
- Low power consumption of max. 12 W, only 1/4 of the consumption of a conventional pump in the same range.
- Drinking-water approved due to the lead-free brass pump housing, stainless-steel rotor and composite impeller.
- Designed to make cleaning limescale and foreign deposits easy by removing the pump head, enabling the product to meet the unlimited water hardness requirement.
- Dry-running protection to prevent failure if the system runs out of water.
- Multiple installation positions, even with the pump head pointing downwards.
- Easy electrical installation with a pre-assembled power plug with a 1.6 m (5.2 ft) cable and a double insulation protection design, eliminating the need for a ground wire.
- Insulating shells for reduced heat loss.
- Optional fittings to increase port-to-port installation length from 140 mm (G 1) to 150 mm (G 1 1/4), enabling easy replacement of Grundfos UP20-07 and UP20-15.

Applications

COMFORT provides instant hot water at fixtures by using the return line (5) to circulate water back to the hot-water supply line (6), ensuring circulation to and from the water heater.

In a system without hot-water recirculation, the remaining hot water eventually loses heat and must be drained before fresh hot water reaches the tap.

The circulation of water in the hot-water recirculation system is driven by a dedicated pump (3), which is installed in the return line. All pump components exposed to water must be made of corrosion-resistant materials, as tap water contains dissolved oxygen and salts that can cause corrosion.

The benefits of hot-water recirculation are instant hot water on demand, reduced waste of water, sanitation of the hot-water supply system, and compliance with local building standards and regulations.

COMFORT circulator pumps are suitable for the following:

- single-loop systems
- branched systems (balancing valves are recommended)
- open-vented systems
- pressurized closed systems with or without mixing (tempering, anti-scalding) valves
- all types of tank water heaters.

Application with tankless water heaters is limited due to a higher pressure loss and minimum start flow rate requirement. For this type of application, special attention is required during design calculations.

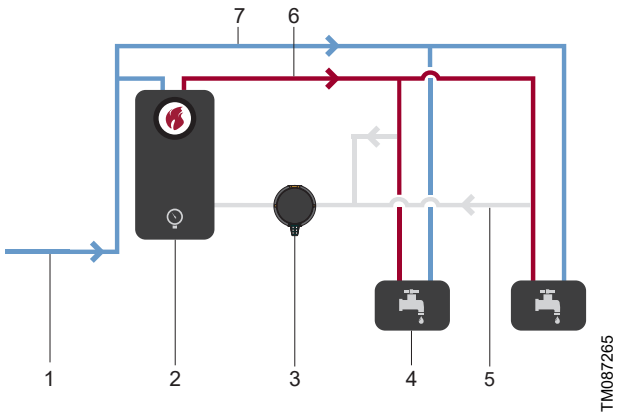

Pos.	Description
1	Water supply
2	Water heater
3	COMFORT pump
4	Fixture
5	Dedicated return line
6	Hot-water supply
7	Cold-water supply

2. Product numbers

COMFORT international, DACH, GB, CN, 1×230 V, 50/60 Hz

Sales region	Pump type	Product number	Port-to-port length	Connection	Supplied with			
					Plug with cable	COMFORT plug	Shut-off valve Non-return valve	Vent screw
International	COMFORT 15-14 B	97916771	80 mm	Rp 1/2	•			
	COMFORT 15-14 B T	93093854			•			
	COMFORT 15-14 B TDT	93093537			•			
	COMFORT 15-14 B TA	97916757			•			
	COMFORT 15-14 BX	97916772	140 mm	G 1	•		•	
	COMFORT 15-14 BX T	93094846			•		•	
	COMFORT 15-14 BX TDT	93093665			•		•	
	COMFORT 15-14 BX TA	97916749			•		•	
	COMFORT 15-14 M	93095662			•			
	COMFORT 15-14 XL BW [1]	93513618			•			•
Germany Austria Switzerland (DACH)	COMFORT 15-14 B DACH	97989265	80 mm	Rp 1/2	•			
	COMFORT 15-14 B T DACH	93094997			•			
	COMFORT 15-14 B TU DACH	93093850			•			
	COMFORT 15-14 B TA DACH	99302331			•			
	COMFORT 15-14 BX DACH	97989266	140 mm	G 1	•		•	
	COMFORT 15-14 BX T DACH	93095533			•		•	
	COMFORT 15-14 BX TU DACH	93094391			•		•	
	COMFORT 15-14 BX TA DACH	99302332			•		•	
	COMFORT 15-14 M DACH	99327264			•			
	COMFORT 15-14 XL BW DACH [1]	93515964			•			•
Great Britain (GB)	COMFORT 15-14 B GB	99164484	80 mm	Rp 1/2		•		
	COMFORT 15-14 B T GB	93095535				•		
	COMFORT 15-14 B TDT GB	93093802				•		
	COMFORT 15-14 B TA GB	99164487				•		
	COMFORT 15-14 BX GB	99164486	140 mm	G 1		•	•	
	COMFORT 15-14 BX T GB	93095538				•	•	
	COMFORT 15-14 BX TDT GB	93094694				•	•	
	COMFORT 15-14 BX TA GB	99164488				•	•	
China (CN)	COMFORT 15-14 B CN	98485504	80 mm	Rp 1/2	•			
	COMFORT 15-14 B T CN	93095635			•			
	COMFORT 15-14 B TDT CN	93094769			•			
	COMFORT 15-14 B TA CN	98485557			•			

1) Lead-free pump housing.

COMFORT, North America, 1×115-230 V, 60 Hz

Sales region	Pump type	Product number	Port-to-port length	Connection	Supplied with	
					Line cord	Shut-off valve Non-return valve
North America [2]	COMFORT 10-16 T BU/LC	92957794	4 1/3"	1 1/4 NPSM	•	•
	COMFORT 10-16 TDT BU/LC	93094713			•	•
	COMFORT 10-16 TA BU/LC	98420224			•	•

2) Lead-free pump housing.

Type key

Type key, international product range

Example: COMFORT 15-14 BX TDT GB

Code	Explanation	Designation
COMFORT 15-14		Pump type
XL	12 W variant	Options
B	Brass pump housing	
W	Lead-free brass housing with vent screw, G 1	
M	Motor (pump head only)	
X	Shut-off and non-return valves, G 1	
[ ]	Continuous operation 24/7	Control modes
T	Temperature control	
DT	Timer	
U	Timer (DACH only)	
A	AUTOADAPT	
[ ]	International	Sales region
GB	Great Britain	
DACH	Germany, Austria, Switzerland	
CN	China	

Type key, North American product range

Example: COMFORT 10-16 TA BU/LC

Code	Explanation	Designation
COMFORT 10-16		Pump type
T	Temperature control	Control modes
DT	Timer	
A	AUTOADAPT	
B	EcoBrass pump housing	Options
U	Shut-off and non-return valves, 1 1/4 NPSM	
LC	Line cord	

3. Control modes

The control modes for COMFORT pumps reduce heat loss of the hot-water recirculation system by optimizing operating time.

By selecting the correct control mode, substantial savings on heat energy consumption for hot-water recirculation can be achieved.

See the table below for the available control modes applicable for each COMFORT variant.

Control mode	COMFORT	COMFORT T	COMFORT TDT (TU)	COMFORT TA
Continuous operation 24/7	•			•
Temperature control		•	• [3]	
Timer			• [3]	
Temperature+ control				•
AUTOADAPT				•

[3] Timer and temperature control can be enabled simultaneously for COMFORT TDT (TU).

Scan the QR code below to access Grundfos Ecademy and learn more about COMFORT control modes.

TM087859

Continuous operation 24/7

The pump operates continuously while connected to the power supply. This control mode is recommended when the hot-water recirculation system is required to operate uninterrupted or when the pump is connected to an external control unit.

Temperature control

This control mode automatically starts the pump when the sensor inside the pump detects that the water temperature has fallen below a set threshold. The threshold is automatically updated based on the maximum system temperature, which is measured for 15 minutes every 12 hours.

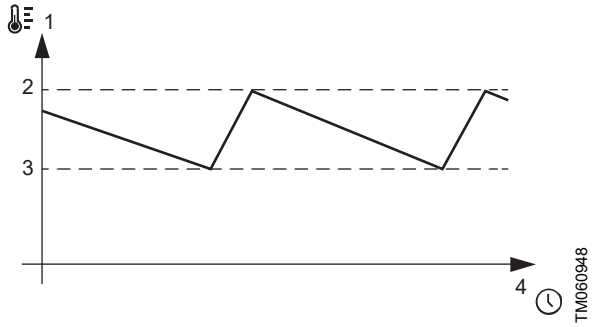

Pos.	Description
1	Water temperature
2	Pump stop
3	Pump start
4	Time

Temperature+ control

This control mode is only available for COMFORT TA variants. The principle of temperature+ control is identical to the temperature control mode with the following added features:

- The pump utilizes both internal and external temperature sensors. The external sensor ensures hot temperature in the supply pipe.
- The maximum temperature of the system is measured constantly, allowing dynamic adjustment of the start/stop temperatures.
- Vacation mode for enhanced energy efficiency: If water has not been tapped for 24 hours, the pump automatically switches to vacation mode and is turned off until the pump registers water being tapped 2 times within 80 minutes. To ensure the system is sanitised, the pump flushes the system every 8 hours for 15 min.

The COMFORT TA pump must be installed in the return line, and the external temperature sensor must be mounted on the supply line.

Timer

COMFORT TDT variants feature an integrated timer that allows manual customization of the operating time of the pump. It eliminates unnecessary heat loss in the system by restricting the operation of hot-water recirculation when no water consumption is expected.

The setting of the timer is done conveniently via the display of the pump in increments of 30 minutes.

In case of power failure, the timer pauses because there is no power reserve. However, the selected operating times and actual time are retained. When power is restored, the pump resumes its last set operating state. If the power outage exceeds 15 minutes, the actual time may need to be reset.

Scan the QR code below to access Grundfos Ecademy and learn more about how to set the timer for COMFORT TDT.

TM087858

AUTOADAPT

AUTOADAPT is an intelligent control mode that automatically adjusts the COMFORT pump to the actual hot water needs. By continuously monitoring the hot-water usage behavior, the pump optimizes its operation to ensure comfort while minimizing energy consumption. This makes AUTOADAPT the most energy-efficient control mode in the COMFORT range.

Algorithm

The pump detects hot-water use by monitoring temperature changes via internal and external sensors. A temperature rise at the supply-line sensor indicates hot-water use. The pump ignores and does not log temperature rises caused by pump operation.

To establish a pattern/an operating schedule for hot-water use, the pump must be switched on and set to AUTOADAPT mode. This process can take up to two weeks. During this period, the pump operates in temperature+ control mode to reduce energy consumption while ensuring hot-water availability.

After the operating schedule is established, the pump predicts hot-water demand and starts operation in advance. The pump is still operating in Temperature+ control to optimize energy efficiency.

When the pump stops according to the schedule, the AUTOADAPT LED flashes continuously.

The control system differentiates between normal use and unexpected demand and adapts to different patterns, including weekdays, weekends and vacation. The operating schedule is continuously updated based on logged usage.

Vacation mode

After 24 hours of detecting no hot-water usage, the pump automatically enters vacation mode and resumes operation when demand for hot water arises. Once the pump detects 2 tapping events within 80 minutes, the pump resumes normal operation.

Flushing and disinfection

If the pump is inactive for 8 hours, it switches on and runs a 15-minute disinfection cycle to flush the recirculation loop as a preventative measure against bacteria growth.

In case of prolonged inactivity, the pump runs the disinfection cycle once a week. If, at another time of the week, a higher temperature is measured, the disinfection run shifts to this time.

Installation requirement for external sensor

The external sensor comes prewired with the pump. The sensor must be mounted on the supply pipe in the range between 20 and 50 cm (8-20 inches) from the water heater.

The length of the wire is 2.5 m (8 ft).

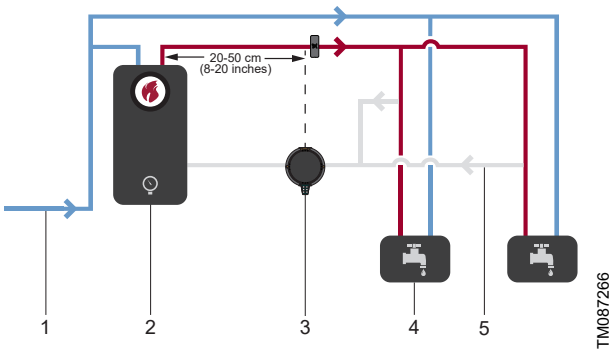

Hot-water recirculation with COMFORT TA

Pos.	Description
1	Water supply
2	Water heater
3	COMFORT pump
4	Fixture
5	Dedicated return line

Warning LED

The warning icon is permanently on if the external temperature sensor is defective. The pump resumes operation in temperature control mode.

4. Construction

All COMFORT pumps features a spherical-motor design. In this concept, the rotor and impeller are integrated into a single component that is held in a gyrating position by axial magnetic forces acting on a zero-play bearing ball. A rotating magnetic field generated by the stator drives the rotor, which operates within the water-carrying section of the pump. This wet section is hermetically sealed from the stator by a stainless-steel separator. The rotor is self-adjusting and lubricated by the pumped liquid.

In contrast to traditional canned motors, the spherical motor has no revolving shaft or radial bearings. Thanks to the zero-play bearing pair, the spherical motor provides the following advantages:

- **Longer service life**
  Extremely low bearing friction and protection against foreign particles at the bearing interface contribute to a longer service life.
- **No limitation on water hardness.**
- **Extremely low noise and vibration.**
- **Simplified maintenance**
  Fewer components and the detachable rotor design have simplified the maintenance.

Stator

The stator is a single-phase, 12-pole permanent-magnet motor in conformity with the EMC directive. A green indicator light on the motor is lit when the motor is running.

This highly efficient permanent-magnet drive generates a rotating magnetic field that acts directly on the 12-pole permanent magnet in the rotor, causing it to rotate. Even when idle, the magnetic field remains highly effective. Its axial components exert a pulling force on the rotor, thereby stabilising it along its longitudinal axis.

The pump motor is impedance-protected and short-circuit-proof. No additional motor protection is required. The terminal box is easily accessible and equipped with functional cable-connection terminals. The cable entry is tight and includes integrated strain relief.

Electrical insulation

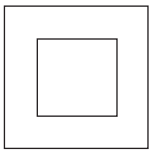

TM059197

Protection Class II symbol

All Grundfos COMFORT models are electrically double-insulated (Protection Class II), making a protective earth connection unnecessary.

Rotor and impeller

A spherical-motor design integrates the rotor and impeller into a single component, which is held in a gyrating position by axial magnetic forces acting on a zero-play bearing ball. The rotor contains a highly efficient 14-pole permanent magnet and is enclosed in stainless-steel cladding, ensuring high reliability and robustness against frequent temperature fluctuations.

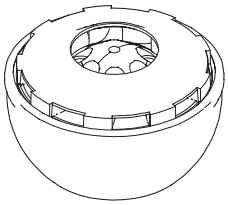

TM065203

Rotor and impeller

Bearing pin and bearing ball

The stainless-steel bearing pin is homogeneously welded to the separating cap. The bearing ball is made of hard-wearing, corrosion-resistant material and is firmly bonded to the bearing pin.

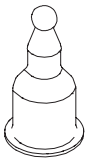

TM065202

Bearing pin and bearing ball

Separator

The stainless-steel separator provides a hermetic barrier that separates the pump stator and electronic components from the water-conducting section.

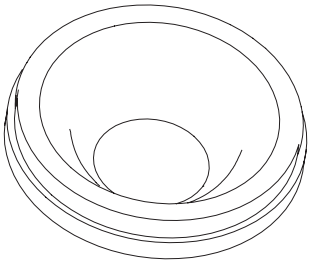

TM065201

Separator

Pump housing

The pump housing is engineered to deliver high hydraulic efficiency by optimally converting the impeller's kinetic energy into pressure. Its threaded connection enables straightforward integration with standard pipe dimensions.

COMFORT circulator pumps are offered in a variety of housing versions and installation lengths, with options that include integrated shut-off and non-return valves or housings prepared for their later installation. COMFORT XL variants feature a housing with an integrated vent screw.

Shut-off valve and non-return valve

The COMFORT pump types BX (Europe) and BU (USA) have an shut-off valve and a non-return valve. The shut-off valve ensures that maintenance can be carried out while the inlet side is isolated. The non-return valve isolates the outlet side during maintenance.

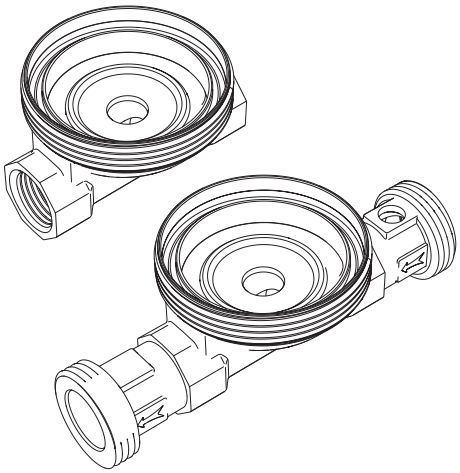

TM068283

Pump housing without and with shut-off and non-return valves

Union nut

The union nut ensures that the motor and the pump housing are tightly connected.

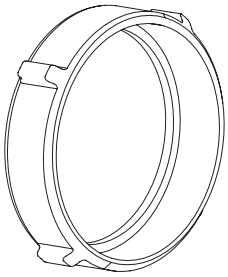

TM065207

Union nut

Vent screw

The pump housing of the COMFORT XL variant incorporates an integrated 1/4" port for an externally supplied vent valve.

Seal ring

The seal ring is located between the motor and the pump housing and is pressed evenly over the entire seal face. Its material is resistant to both hydrolysis and aging, ensuring that the domestic hot-water circulation pump remains leakproof throughout its entire service life.

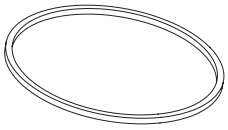

TM065206

Seal ring

Exploded drawings

COMFORT XL

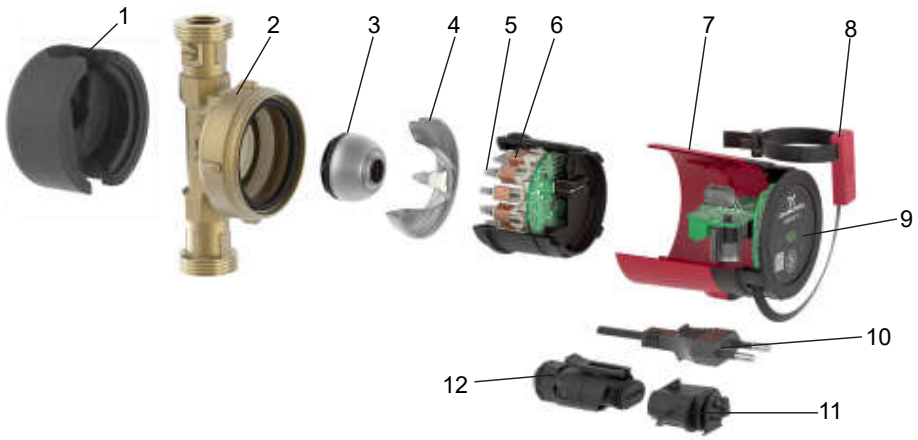

COMFORT, International

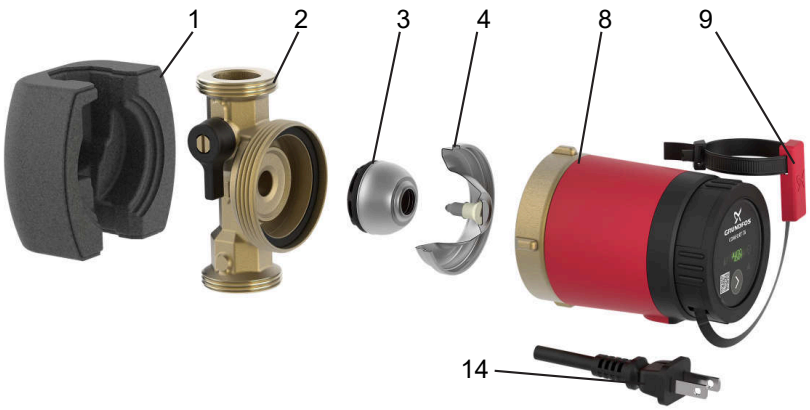

COMFORT, North America

Material specification

Pos.	Component	Material
1	Insulating shells	EPP 55
2	Pump housing COMFORT. International	Brass (CuZn39Pb3)
	Pump housing COMFORT, North America	Lead-free brass (ASTM C28500)
	Pump housing COMFORT XL, International	Lead-free brass (CuZn42)
3	Rotor and impeller	Stainless steel, EPDM, PPO, PFTE, graphite
4	Separator	Stainless steel
5	Stator lamination	Steel
6	Stator windings	Copper wire and enamel
7	Motor cover	PPO
8	External temperature sensor (TA variants only)	-
9	Front foil	-
10	Power plug, International	PC/AB
11	Power plug	-
12	COMFORT plug	PA66
13	Power plug, MENA 1-15P	-
14	Retaining flange	Zinc diecasting
15	O-ring	EPDM
16	Pump housing extension	Brass
17	Rubber gasket	EPDM
18	Rubber gasket	EPDM

5. Operating conditions

Technical data

Supply voltage	International models:	1 × 230 V, 50/60 Hz
	North American models:	1 × 115/230 V, 50/60 Hz
Max. power consumption	COMFORT 15-14	7 W
	COMFORT 15-14 XL	12 W
	COMFORT 10-16	6 W
Max. current	COMFORT 15-14	0.07 A
	COMFORT 15-14 XL	0.11 A
	COMFORT 10-16	0.1 A
Motor protection	The pump requires no external motor protection.	
Insulation class	F	
Appliance class	Double insulated	
Overvoltage category	II	
Enclosure class	International: IP44 North America: Type 2	
Ambient temperature	0-40 °C (32-104 °F)[4]	
Max. liquid temperature	International: 95 °C (TF 95) North America: 180 °F (82 °C)	
Max. outlet pressure	PN10 (10 bar [145 psi])	
Min. inlet pressure	0.75 psi (0.05 bar) [5]	
Sound pressure level	< 25 dB(A)	
Pump housing	COMFORT 15-14: Brass CuZn39Pb3 COMFORT 15-14 XL: CuZn42[6] COMFORT 10-16: ASTM C28500[6]	
Pollution degree	2	

4) The ambient temperature must always be lower than the liquid temperature to minimize condensation in the stator housing, and not exceed 40 °C (104 °F).

5) A minimal inlet pressure is required at the pump inlet port to prevent cavitation noise and damage to the pump bearing.

6) The lead content of the pump housing is below 0.2 %.

Installation requirement

Indoor installation only. It must be in a non-aggressive and non-explosive atmosphere.

Relative humidity: Maximum 95 %.

Maximum installation altitude: 2000 m (6500 ft).

6. Performance curves

Curve conditions

The guidelines below apply to the performance curves on the following pages:

- Test liquid: airless water.
- The measurements for COMFORT have been made at a water temperature of 20 °C (68 °F).
- All curves show average values and must not be used as guarantee curves. If a specific minimum performance is required, individual measurements must be made.
- The COMFORT curves apply to a kinematic viscosity of υ = 1 mm^2/s (1 cSt).

The conversion between head H [m] and pressure p [kPa] was made for water with a density of ρ = 1000 kg/m^3.
For liquids with other densities, for example hot water, the outlet pressure is proportional to the density.

Data sheets

COMFORT 15-14 B (international, DACH, CN)

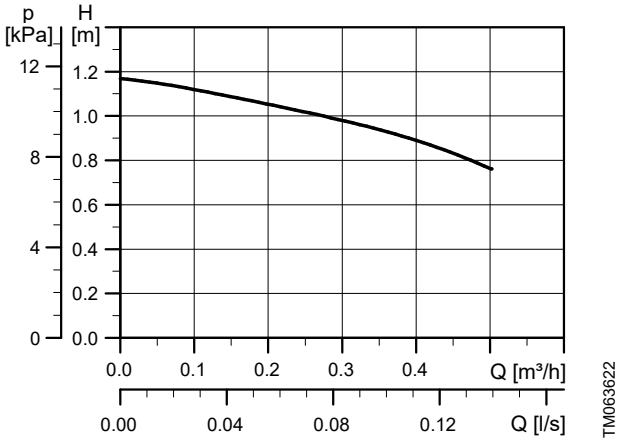

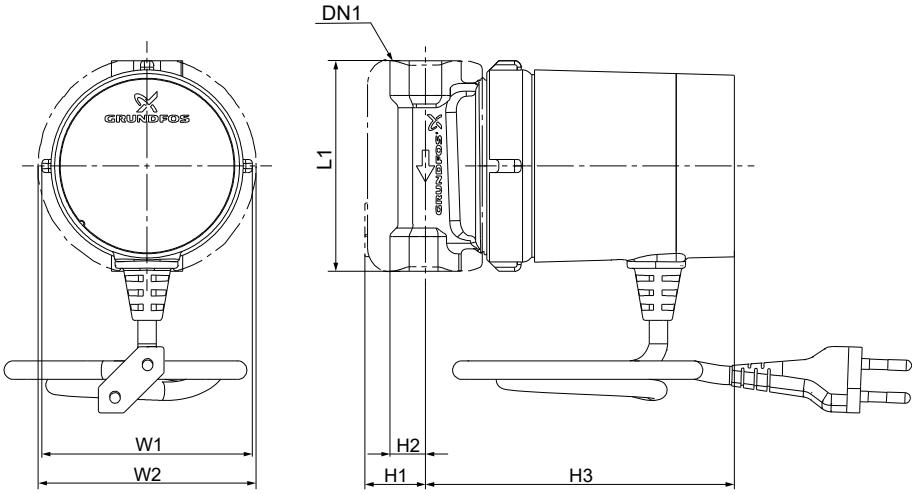

Pump type	Dimensions[mm]							Weights[kg]		Shipping volume
	L1	H1	H2	H3	W1	W2	DN1	Net	Gross	[m³]
COMFORT 15-14 B COMFORT 15-14 B DACH COMFORT 15-14 B CN	80	25	13.5	119	79.5	84	Rp 1/2"	0.94	1.04	0.0026

Related information

Technical data

Union sets and valves for COMFORT North American variants

COMFORT B T 15-14 (international, DACH, CN)

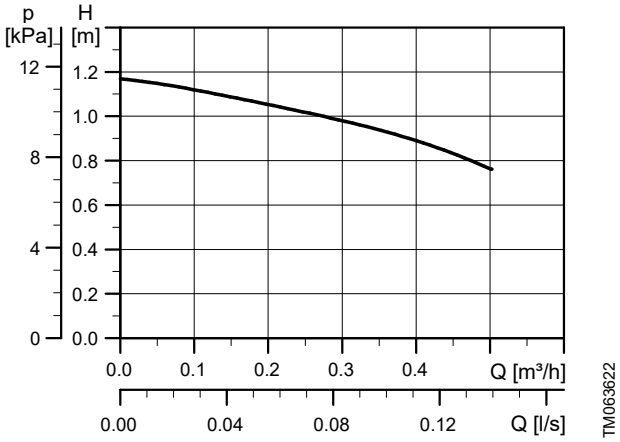

Dimensions

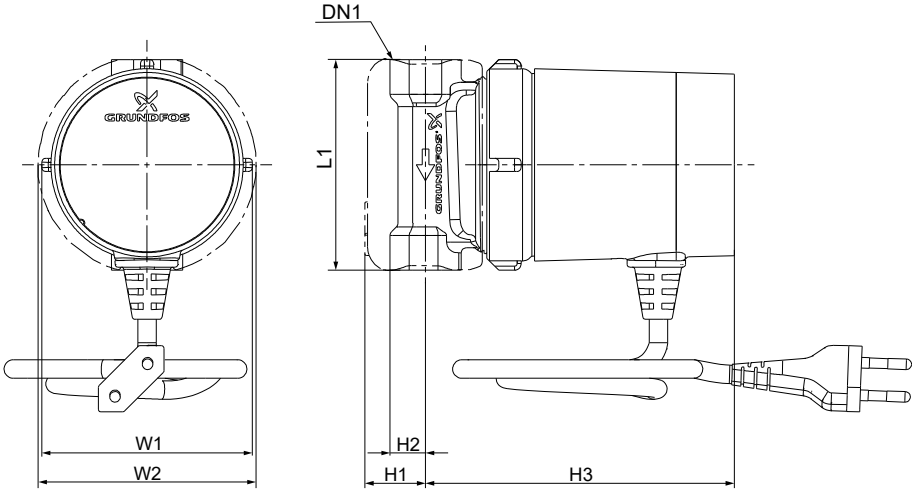

Pump type	Dimensions[mm]							Weights[kg]		Shipping volume
	L1	H1	H2	H3	W1	W2	DN1	Net	Gross	[m³]
COMFORT 15-14 B T COMFORT 15-14 B T DACH COMFORT 15-14 B T CN	80	25	13.5	119	79.5	84	Rp 1/2"	0.98	1.08	0.0026

Related information

Technical data

Union sets and valves for COMFORT international variants

COMFORT 15-14 B TDT (international, CN), 15-14 B TU (DACH)

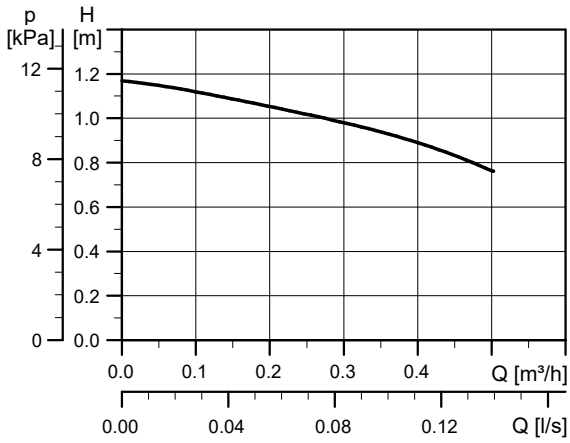

Dimensions

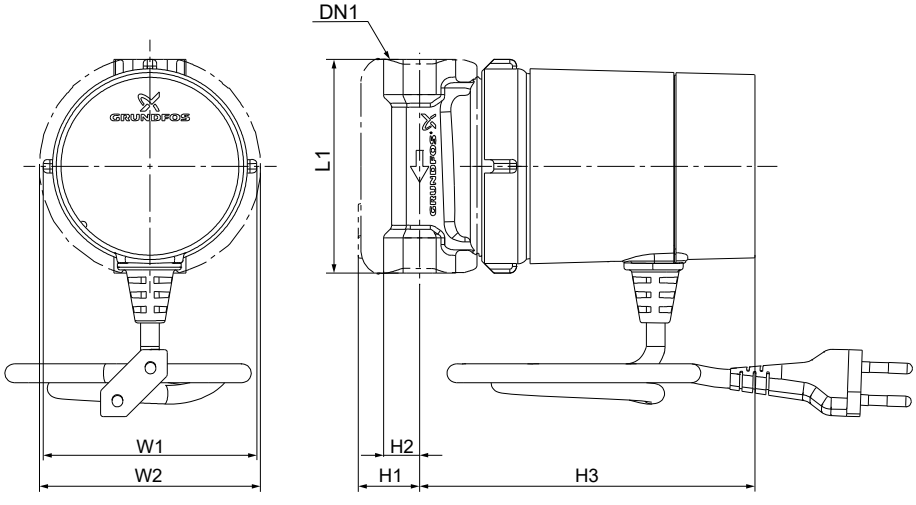

Pump type	Dimensions[mm]							Weights[kg]		Shipping volume
	L1	H1	H2	H3	W1	W2	DN1	Net	Gross	[m³]
COMFORT 15-14 B TDT COMFORT 15-14 BU TDT DACH COMFORT 15-14 B TDT CN	80	25	13.5	124	79.5	84	Rp 1/2"	0.94	1.04	0.0026

Related information

Technical data

Union sets and valves for COMFORT international variants

COMFORT 15-14 B TA (international, DACH, CN)

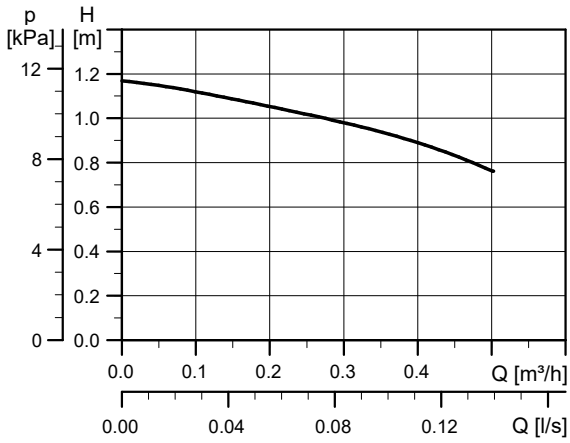

Dimensions

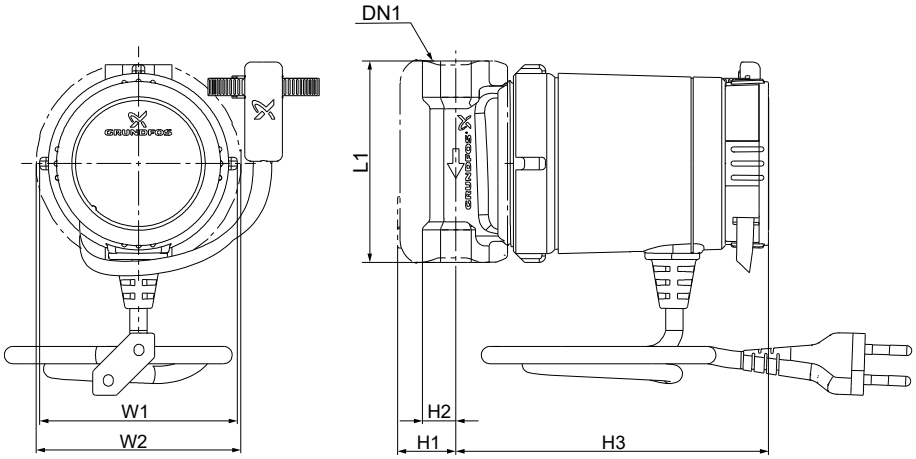

Pump type	Dimensions[mm]							Weights[kg]		Shipping volume
	L1	H1	H2	H3	W1	W2	DN1	Net	Gross	[m³]
COMFORT 15-14 B TA COMFORT 15-14 B TA DACH COMFORT 15-14 B TA CN	80	25	13.5	124	79.5	84	Rp 1/2"	0.98	1.08	0.0026

Related information

Technical data

Union sets and valves for COMFORT international variants

COMFORT 15-14 BX (international, DACH)

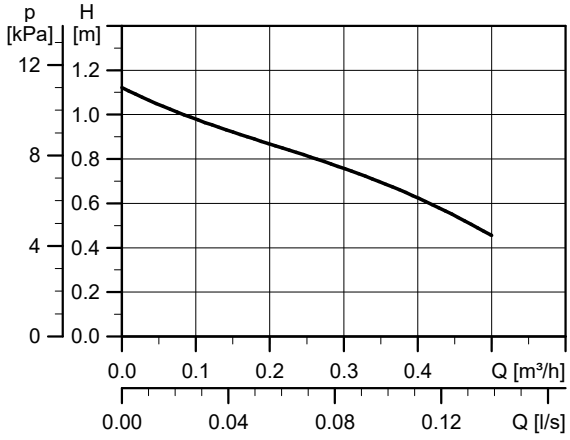

Dimensions

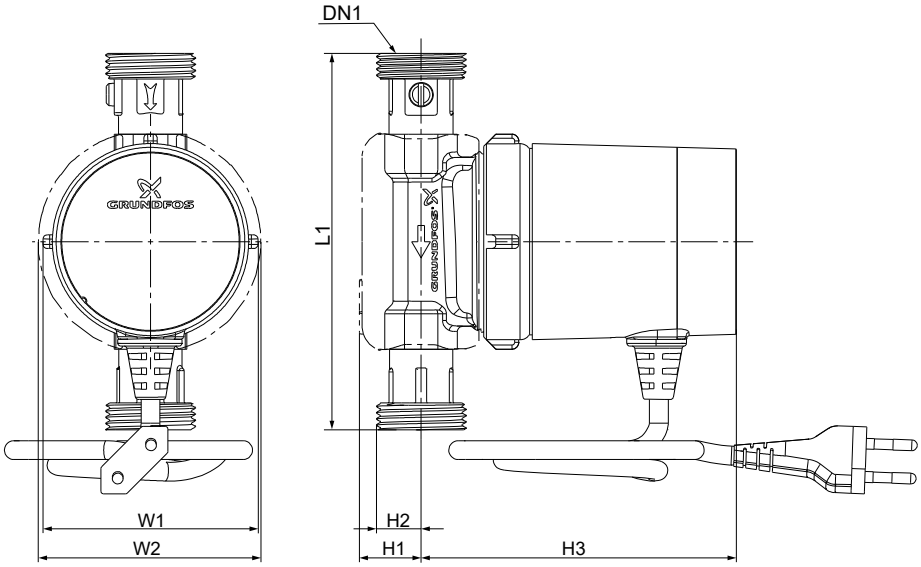

Pump type	Dimensions[mm]							Weights[kg]		Shipping volume
	L1	H1	H2	H3	W1	W2	DN1	Net	Gross	[m³]
COMFORT 15-14 BX COMFORT 15-14 BX DACH	140	25	21	119	79.5	84	G 1"	1.14	1.24	0.026

Related information

Technical data

Union sets and valves for COMFORT international variants

COMFORT 15-14 BX T (international, DACH)

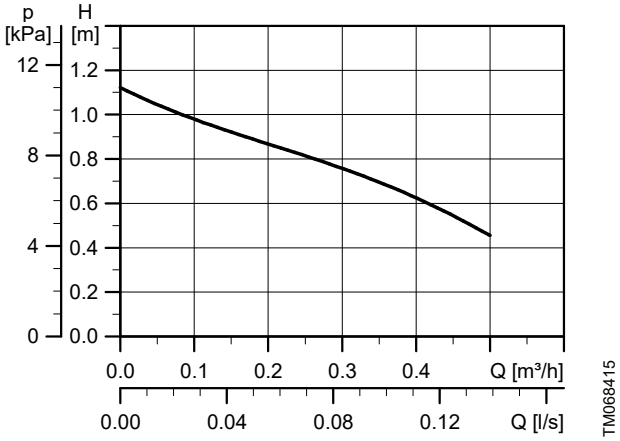

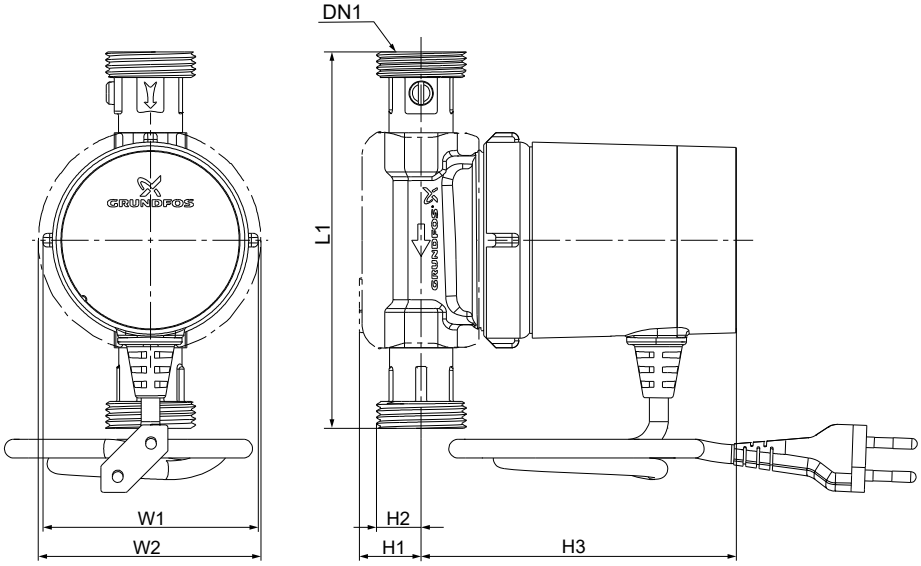

Pump type	Dimensions[mm]							Weights[kg]		Shipping volume
	L1	H1	H2	H3	W1	W2	DN1	Net	Gross	[m³]
COMFORT 15-14 BX T COMFORT 15-14 BX T DACH	140	25	21	119	79.5	84	G 1"	1.14	1.24	0.0026

Related information

Technical data

Union sets and valves for COMFORT international variants

COMFORT 15-14 BX TDT (international), 15-14 BX TU (DACH)

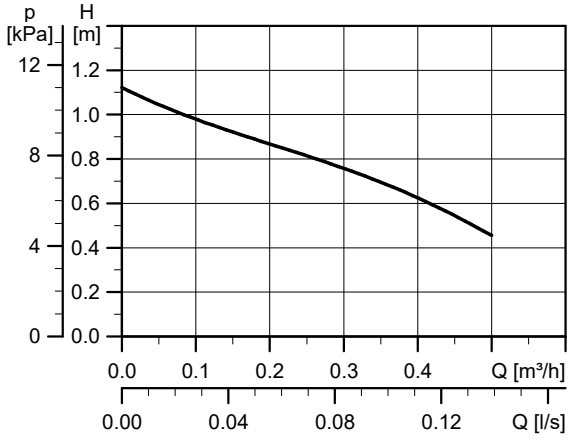

TM068415

Dimensions

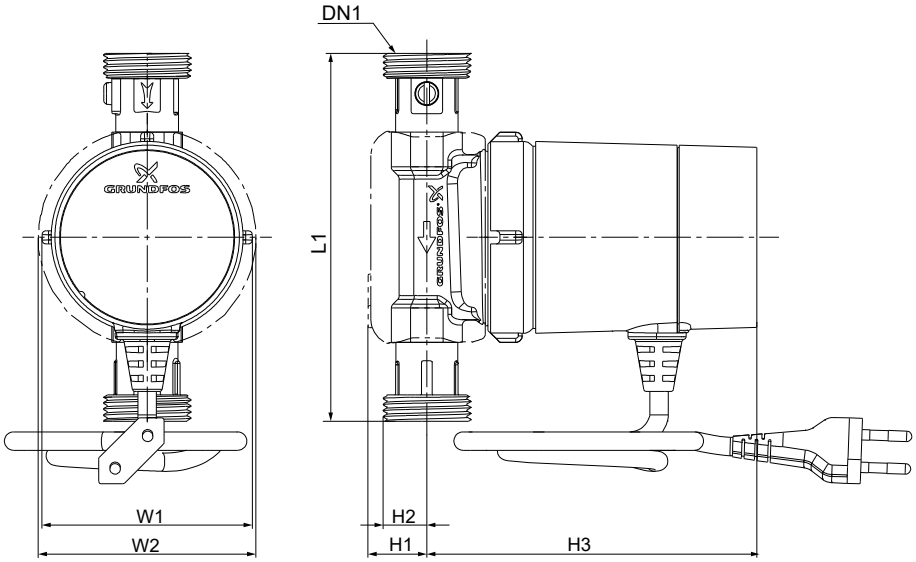

TM087166

Pump type	Dimensions[mm]							Weights[kg]		Shipping volume
	L1	H1	H2	H3	W1	W2	DN1	Net	Gross	[m³]
COMFORT 15-14 BX TDT	140	25	21	124	79.5	84	G 1"	1.14	1.24	0.0026
COMFORT 15-14 BX TU DACH										

Related information

Technical data

Union sets and valves for COMFORT international variants

COMFORT 15-14 BX TA (international, DACH)

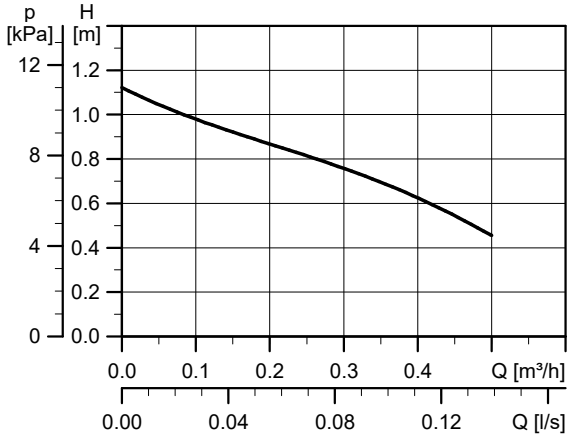

Dimensions

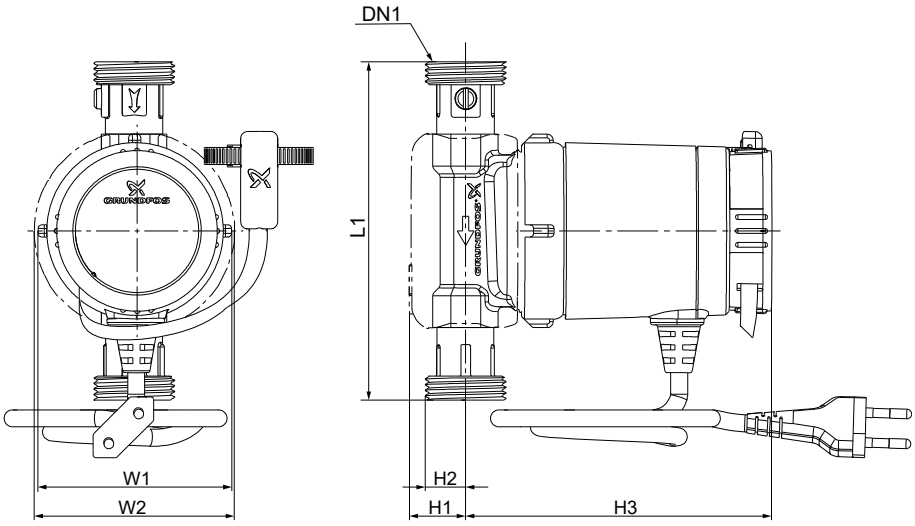

Pump type	Dimensions[mm]							Weights[kg]		Shipping volume
	L1	H1	H2	H3	W1	W2	DN1	Net	Gross	[m³]
COMFORT 15-14 B TA COMFORT 15-14 B TA DACH	140	25	21	124	79.5	84	G 1"	1.18	1.28	0.0026

Related information

Technical data

Union sets and valves for COMFORT international variants

COMFORT 15-14 B (GB)

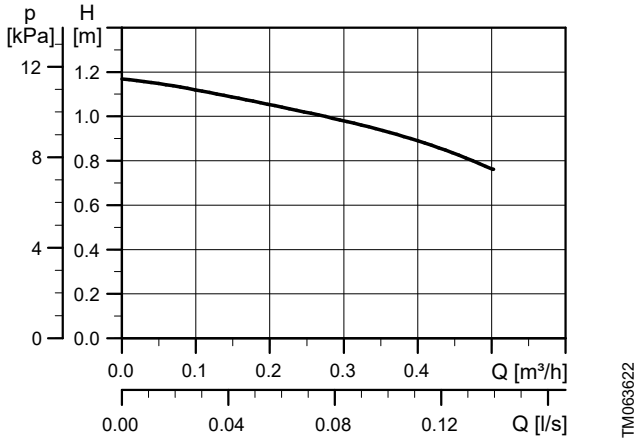

Dimensions

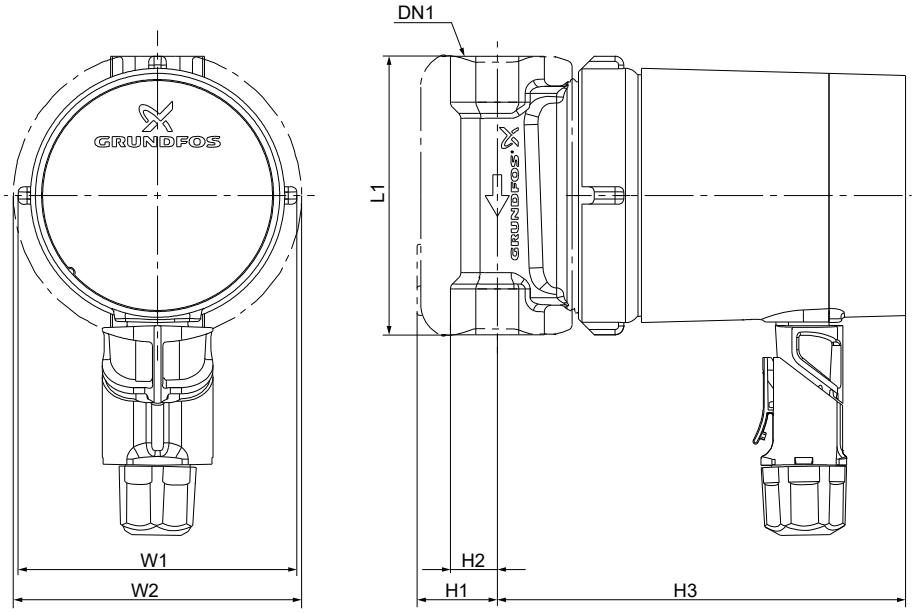

Pump type	Dimensions[mm]							Weights[kg]		Shipping volume
	L1	H1	H2	H3	W1	W2	DN1	Net	Gross	[m³]
COMFORT 15-14 B GB	80	25	13.5	119	79.5	84	Rp 1/2"	0.86	0.96	0.0026

Related information

Technical data

Union sets and valves for COMFORT international variants

COMFORT 15-14 B T (GB)

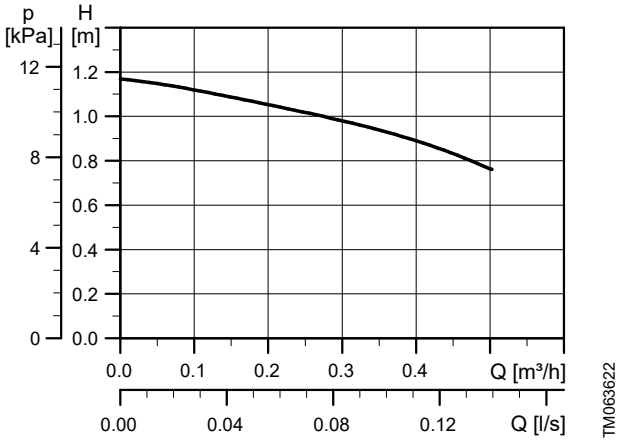

Dimensions

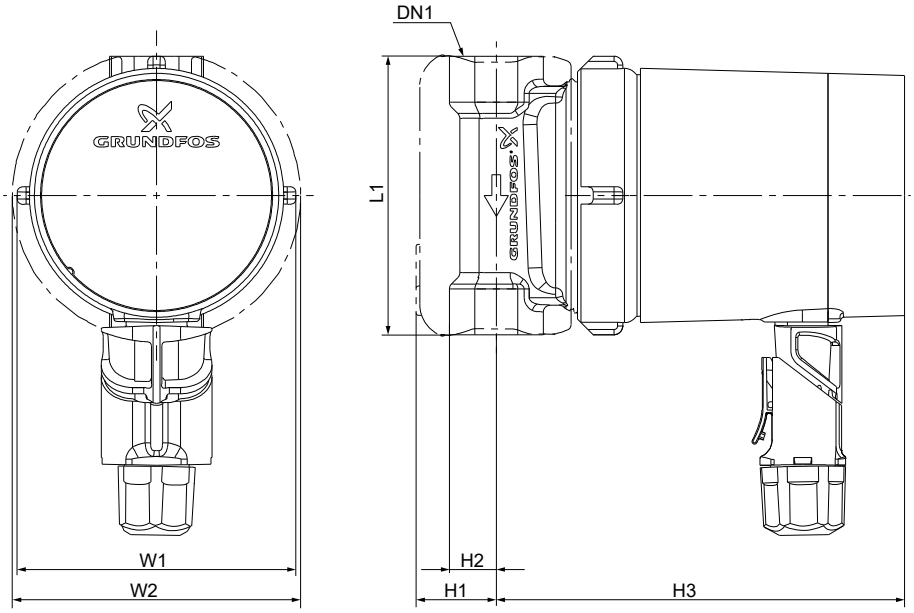

Pump type	Dimensions[mm]							Weights[kg]		Shipping volume
	L1	H1	H2	H3	W1	W2	DN1	Net	Gross	[m³]
COMFORT 15-14 B T GB	80	25	13.5	119	79.5	84	Rp 1/2"	0.98	1.08	0.0026

Related information

Technical data

Union sets and valves for COMFORT international variants

COMFORT 15-14 B TDT (GB)

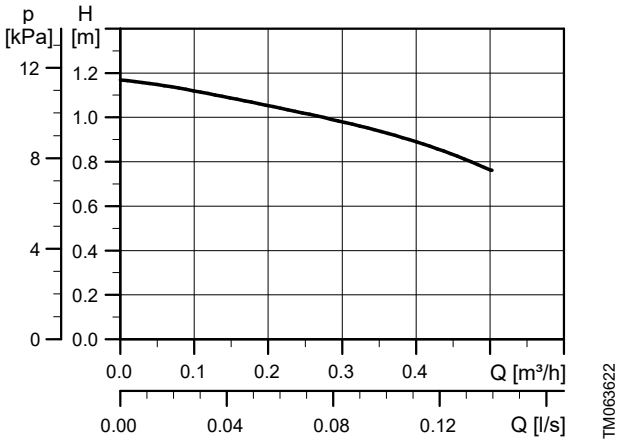

Dimensions

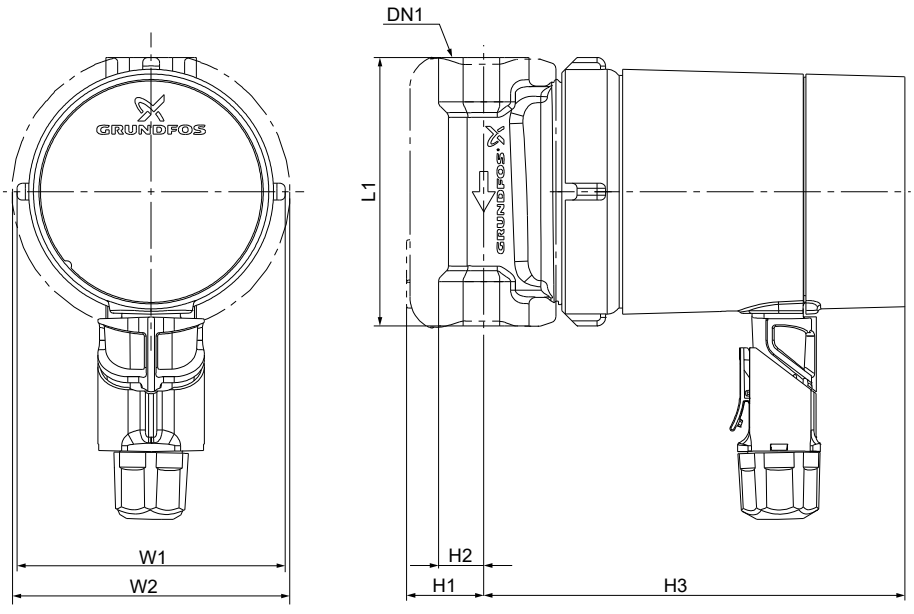

Pump type	Dimensions[mm]							Weights[kg]		Shipping volume
	L1	H1	H2	H3	W1	W2	DN1	Net	Gross	[m³]
COMFORT 15-14 B TDT GB	80	25	13.5	124	79.5	84	Rp 1/2"	0.94	1.04	0.0026

Related information

Technical data

Union sets and valves for COMFORT international variants

COMFORT 15-14 B TA (GB)

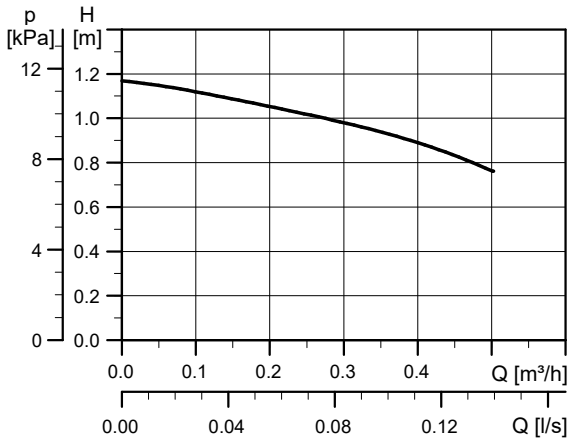

Dimensions

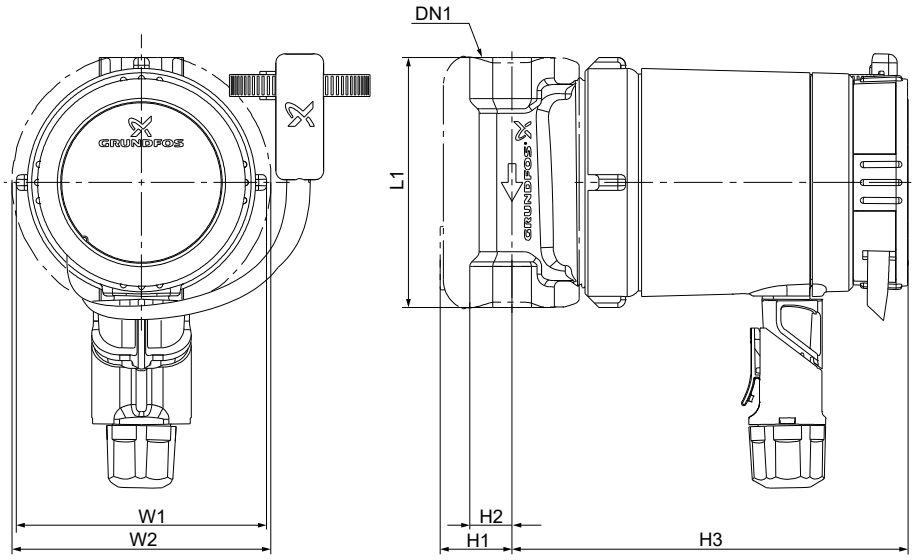

Pump type	Dimensions[mm]							Weights[kg]		Shipping volume
	L1	H1	H2	H3	W1	W2	DN1	Net	Gross	[m³]
COMFORT 15-14 B TA GB	80	25	13.5	124	79.5	84	Rp 1/2"	0.98	1.08	0.0026

Related information

Technical data

Union sets and valves for COMFORT international variants

COMFORT 15-14 BX (GB)

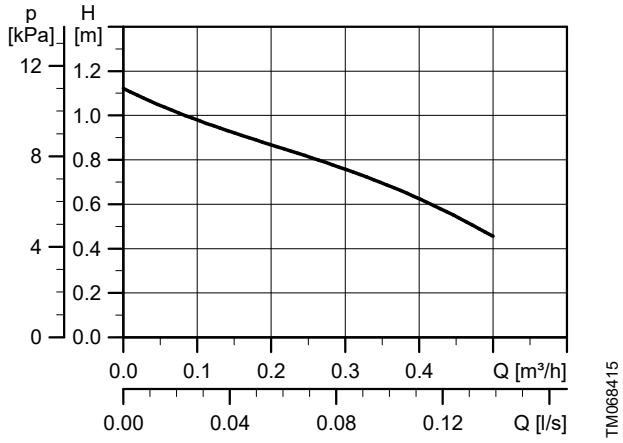

Dimensions

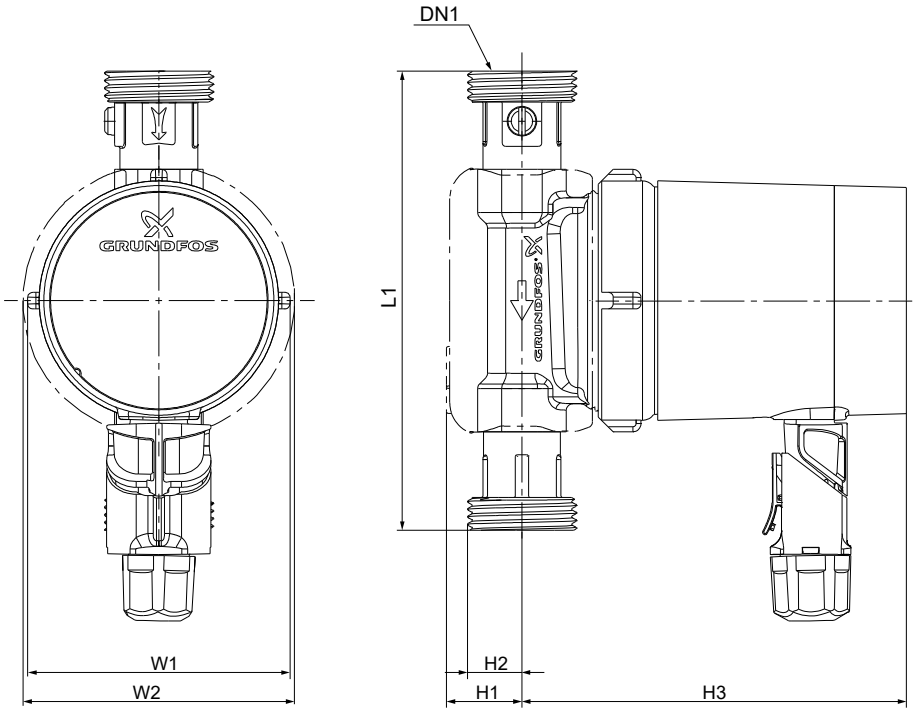

Pump type	Dimensions[mm]							Weights[kg]		Shipping volume
	L1	H1	H2	H3	W1	W2	DN1	Net	Gross	[m³]
COMFORT 15-14 BX GB	140	25	21	119	79.5	84	G 1"	1.07	1.17	0.0026

Related information

Technical data

Union sets and valves for COMFORT international variants

COMFORT 15-14 BX T (GB)

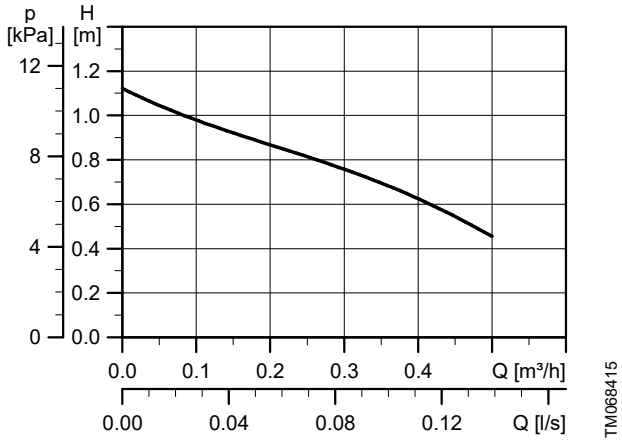

Dimensions

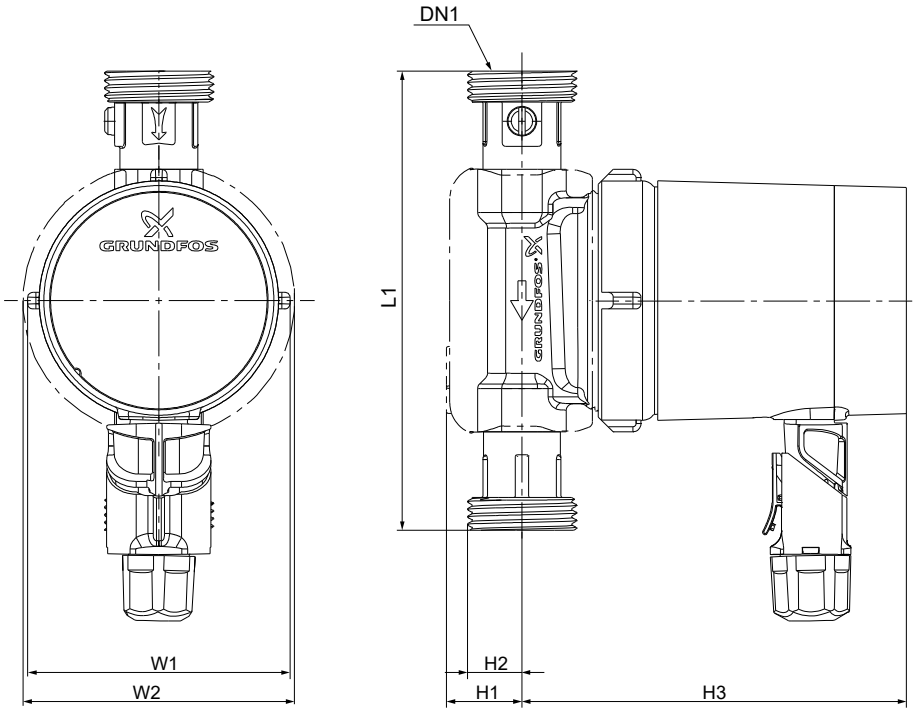

Pump type	Dimensions[mm]							Weights[kg]		Shipping volume
	L1	H1	H2	H3	W1	W2	DN1	Net	Gross	[m³]
COMFORT 15-14 BX T GB	140	25	21	119	79.5	84	G 1"	1.14	1.24	0.0026

Related information

Technical data

Union sets and valves for COMFORT international variants

COMFORT 15-14 BX TDT (GB)

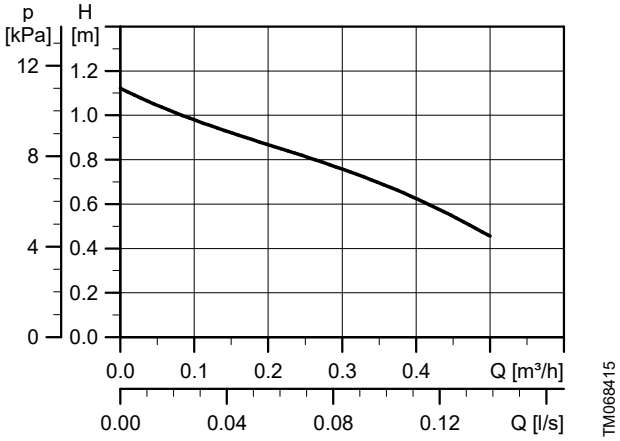

Dimensions

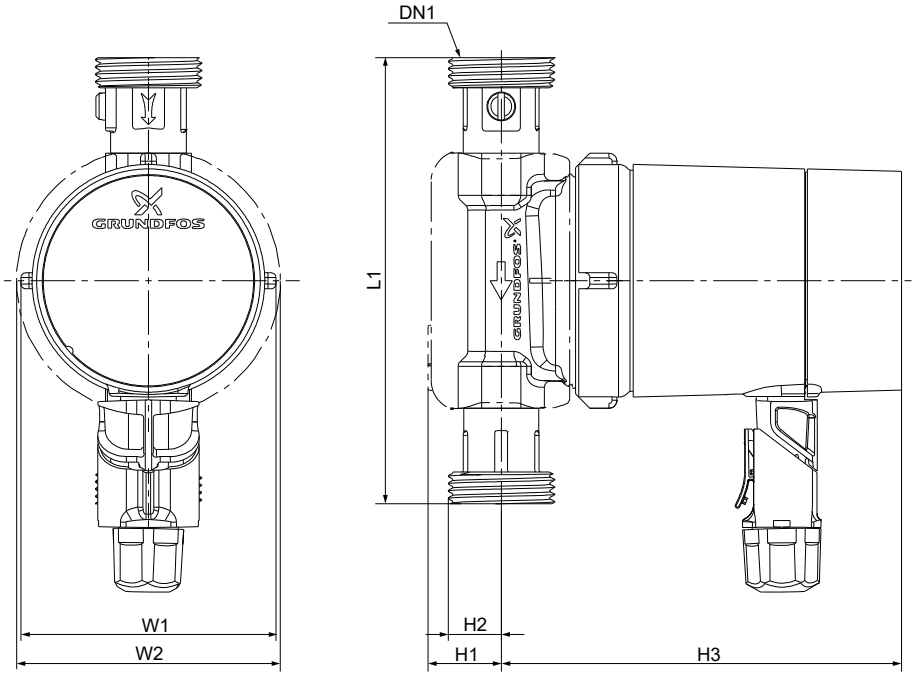

Pump type	Dimensions[mm]							Weights[kg]		Shipping volume
	L1	H1	H2	H3	W1	W2	DN1	Net	Gross	[m³]
COMFORT 15-14 BX TA GB	140	25	21	124	79.5	84	G 1"	1.14	1.24	0.0026

Related information

Technical data

Union sets and valves for COMFORT international variants

COMFORT 15-14 BX TA (GB)

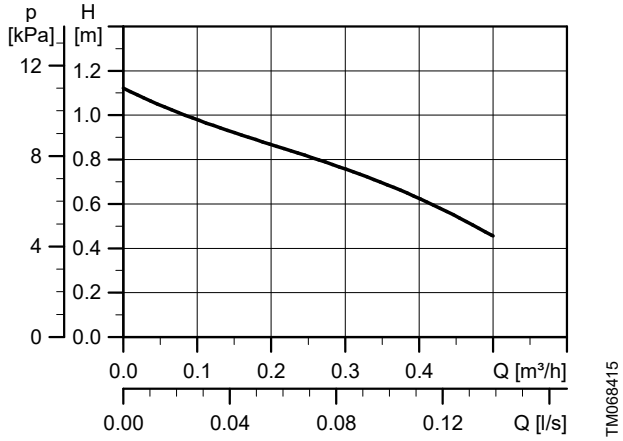

Dimensions

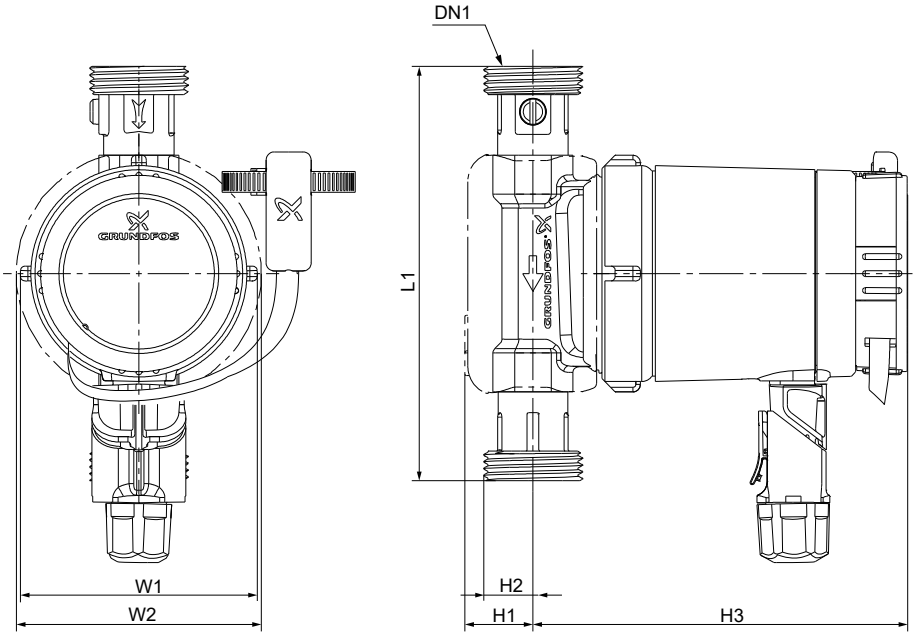

Pump type	Dimensions[mm]							Weights[kg]		Shipping volume
	L1	H1	H2	H3	W1	W2	DN1	Net	Gross	[m³]
COMFORT 15-14 BX TA GB	140	25	21	124	79.5	84	G 1"	1.18	1.28	0.0026

Related information

Technical data

Union sets and valves for COMFORT international variants

COMFORT 15-14 M, 15-14 M DACH

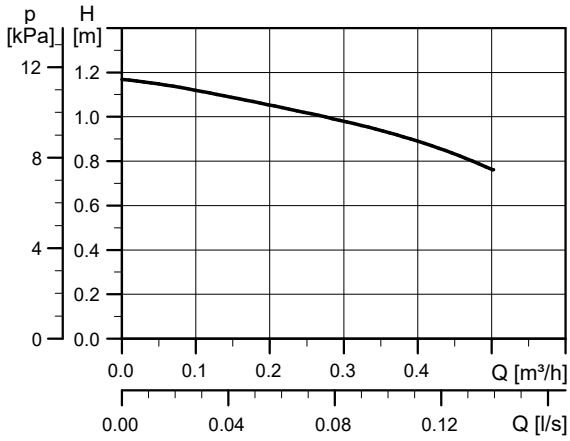

Dimensions

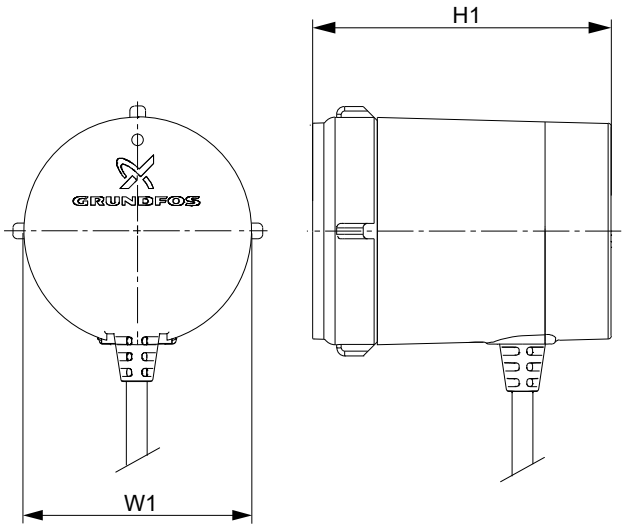

Pump type	Dimensions[mm]		Weights[kg]		Shipping volume
	H1	W1	Net	Gross	[m³]
COMFORT 15-14 M	25	79.5	0.56	0.66	0.0026
COMFORT 15-14 M DACH					

Related information

Technical data

Union sets and valves for COMFORT international variants

COMFORT 15-14 XL BW

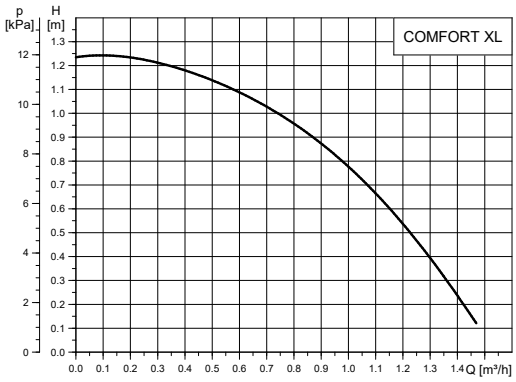

Dimensions

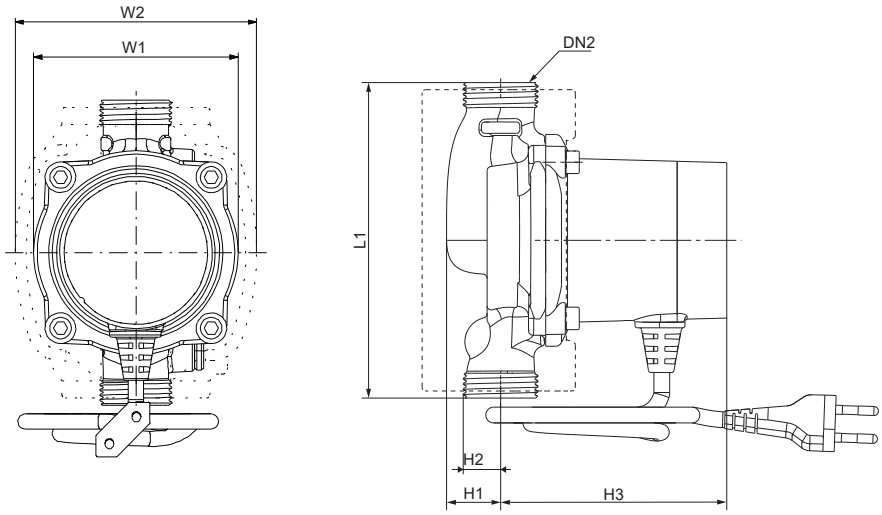

Pump type	Dimensions[mm]							Weights[kg]		Shipping volume
	W1	W2	L1	H1	H2	H3	DN2	Net	Gross	[m³]
COMFORT 15-14	94	112	140	33	22	108	G1	1.45	1.52	0.0026

Related information

Technical data

Union sets and valves for COMFORT international variants

COMFORT 10-16 T BU/LC

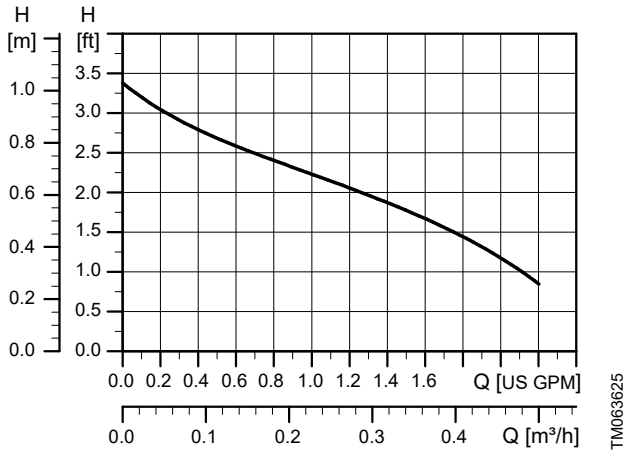

Dimensions

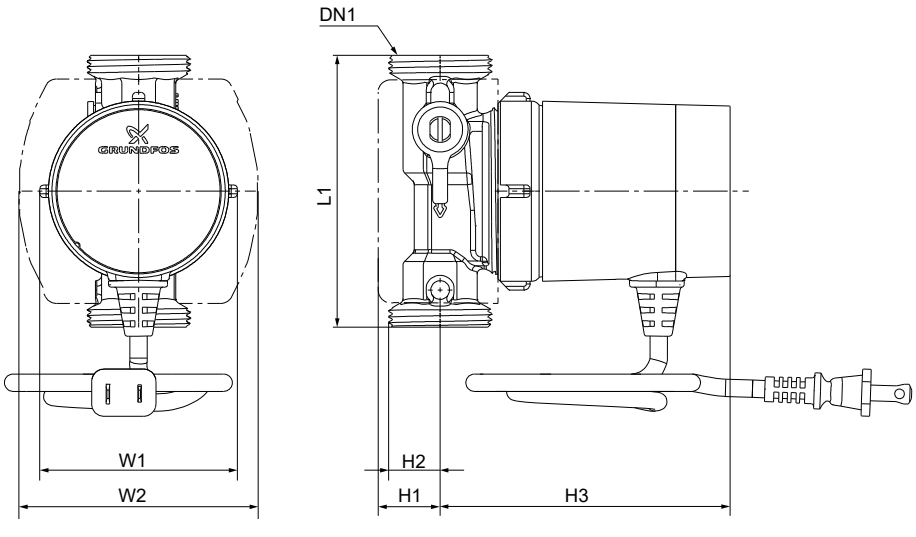

Pump type	Dimensions[inch]							Weights [lb]		Shipping volume
	L1	H1	H2	H3	W1	W2	DN1	Net	Gross	[ft³]
COMFORT 10-16 T BU/LC	4 1/3"	0.98	0.5	4.69	3.31	3.13	1 1/4" NPSM	3.07	3.4	0.12

Related information

Technical data

Union sets and valves for COMFORT North American variants

COMFORT 10-16 TDT BU/LC

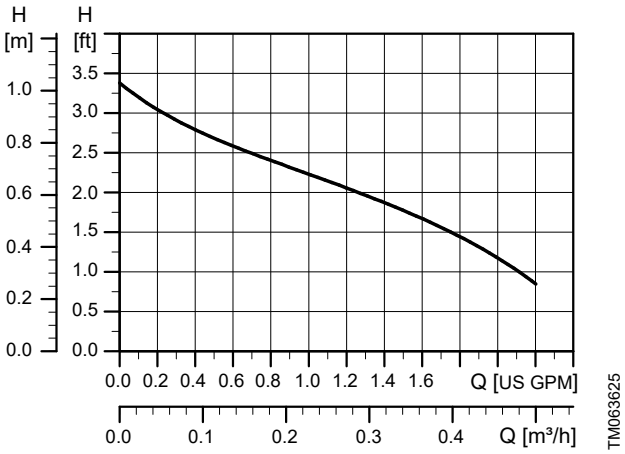

Dimensions

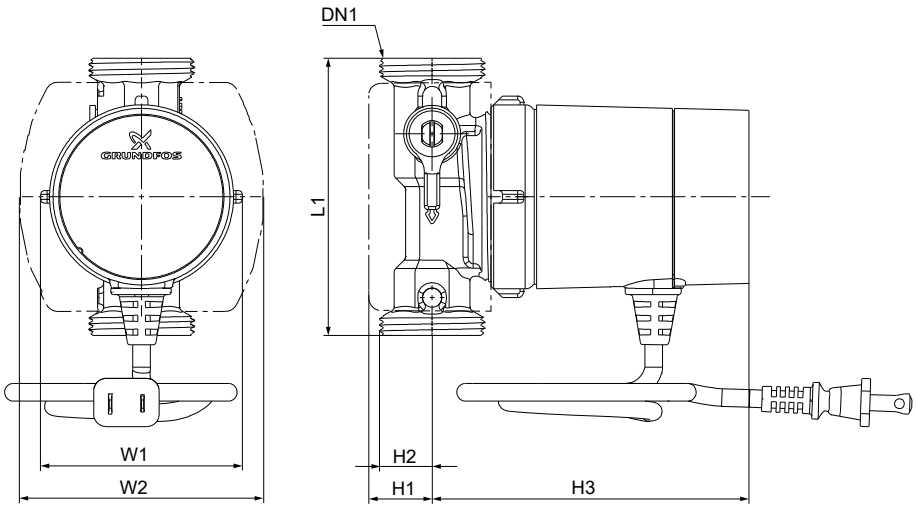

Pump type	Dimensions[inch]							Weights [lb]		Shipping volume
	L1	H1	H2	H3	W1	W2	DN1	Net	Gross	[ft^3]
COMFORT 10-16 TDT BU/LC	4 1/3"	0.98	0.5	4.88	3.13	3.31	1 1/4" NPSM	3.17	3.4	0.12

Related information

Technical data

Union sets and valves for COMFORT North American variants

COMFORT 10-16 TA BU/LC

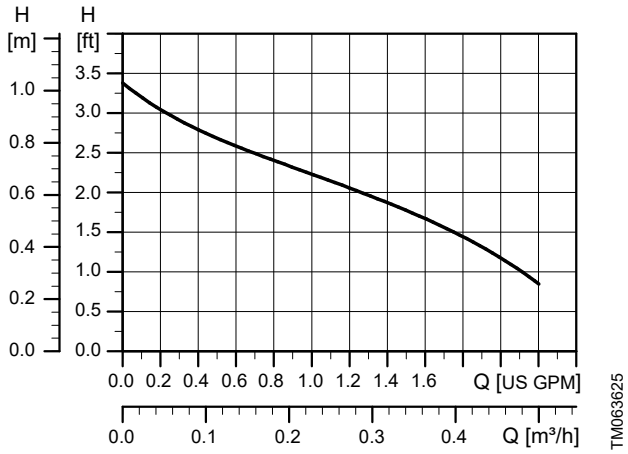

Dimensions

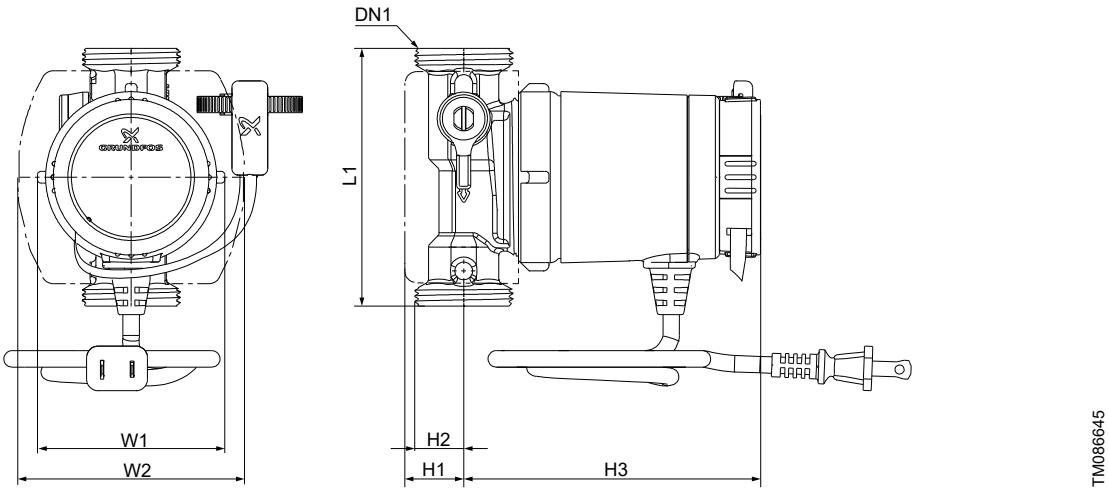

Pump type	Dimensions[inch]							Weights [lb]		Shipping volume
	L1	H1	H2	H3	W1	W2	DN1	Net	Gross	[ft³]
COMFORT 10-16 TA BU/LC	4 1/3"	0.98	0.5	4.88	0.5	0.98	1 1/4" NPSM	3.17	3.4	0.12

Related information

Technical data

Union sets and valves for COMFORT North American variants

7. Accessories

Union sets and valves for COMFORT international variants

Product name	Description	Connection	Material	Product number
Shut-off valve	The valve enables shutting off a section of the pipes. Paired with a non-return valve, it simplifies pump or system maintenance. It fits Rp 1/2 COMFORT variants.	R 1/2 × Rp 1/2	Brass	96433905
Non-return valve	The valve prevents flow in the opposite direction. Paired with an shut-off valve, it simplifies pump or system maintenance. It fits Rp 1/2 COMFORT variants.	R 1/2 × Rp 1/2	Brass	96433904
Union set	The set enables connecting the pump with the pipes. Sealing gaskets are included. It fits G1 COMFORT “X” variants.	G 1 × R 1/2	Brass	99415021
		G 1 × Rp 1/2		92967673
		G 1 × R 3/4“		93054545
Installation kit with a union set	The kit includes: • shut-off valve, G1 • non-return valve, G1 • union set G 1 x R ½ • sealing gaskets. It fits Rp 1/2 COMFORT variants.	Rp 1/2 × R 1/2	Brass	00ID8748
Installation kit with a press fitting set	The kit includes: • shut-off valve, G1 • non-return valve, G1 • press fitting set G1 x 15 mm • sealing gaskets. It fits Rp 1/2 COMFORT variants.	Rp ½ x 15 mm	Brass	91076731

Adapters

Adapters extend the port-to-port length of the COMFORT pump and adapt the connection dimensions, enabling straightforward replacement of pumps with alternative connection standards.

Product name	Description	Extension length	Connection	Material	Product number
Extension set	COMFORT 80 mm to 130 mm	2 x 25 mm	Rp 1/2 x G 1 1/2	Brass	96433912
	COMFORT XL 140 mm to 150 mm	2 x 5 mm	G 1 x G 1 1/4	Brass	93528349

Union sets and valves for COMFORT North American variants

Pipe type	Description	Connection	Material	Product number
Universal	Fittings for threaded connection with the pipe. Male connection for pipe side. Union connection for pump side.	GU125 × 3/4 FNPT BZ	Bronze	529912
	Fittings with a built-in shut-off valve. Female connection for pipe side. Union connection for pump side.	Union kit GU125 × 1/2 FNPT	Bronze	519850
		Union kit GU125 × 3/4 FNPT Iso Vlv	Bronze	519852
	Fittings with a built-in shut-off valve. Compression connection for pipe side. Union connection for pump side.	Union kit GU125 × 3/4 Comp Iso Vlv	Bronze	519851
Copper	Fittings for solder connection	Union kit GU125 × 1/2 sweat brass	Brass	529913
		Union kit GU125 × 3/4 sweat brass	Brass	529911

Pipe type	Description	Connection	Material	Product number
PEX	Fittings for crimp connection	Union kit GU125 × 1/2 PEX crimp	Brass	93125844
		Union kit GU125 × 3/4 PEX crimp	Brass	93125859
	Fittings for expansion connection	Union kit GU125 × 1/2 PEX expansion	Brass	93199923
		Union kit GU125 × 3/4 PEX expansion	Brass	93199929

Miscellaneous

For COMFORT international and North American variants.

Accessory	Description	Connection	Material	Product number
Vent flange	The vent enables removal of air from the system.	Applicable to all COMFORT pump housings	PP Brass PE	96433906

Spare parts

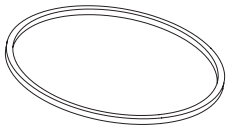

TM065206

For COMFORT international and North American variants.

Description	Product number
Gasket 53.5 × 61 × 3.5 mm EPDM Min. order quantity: 20 pcs.	91076310

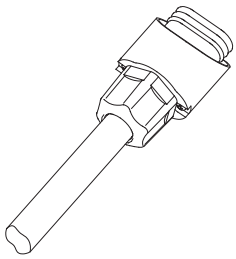

TM019911

For COMFORT GB variants.

Description	Product number
Spare plug for COMFORT	98685259
Bulk COMFORT plug (80 pcs.)	98890117

8. Grundfos Product Center

Online search and sizing tool to help you make the right choice.
From the international view, you can select your specific country to view the product range available to you.
International view: *http://product-selection.grundfos.com*

All the information you need in one place

Performance curves, technical specifications, pictures, dimensional drawings, motor curves, wiring diagrams, spare parts, service kits, 3D drawings, documents, system parts. The Product Center displays any recent and saved items - including complete projects - right on the main page.

Downloads

On the product pages, you can download installation and operating instructions, data booklets, service instructions, etc., in PDF format.

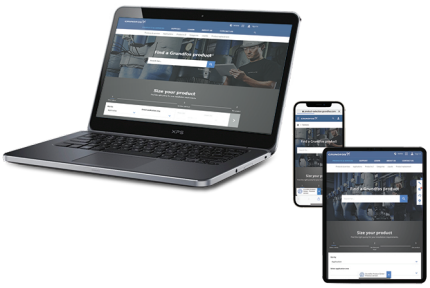

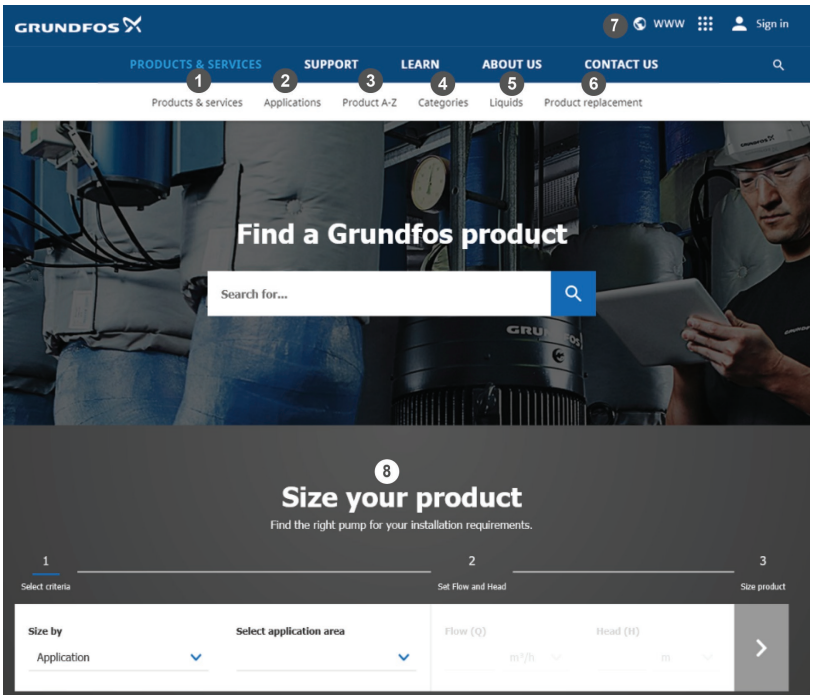

When you select your country, you will see the menus below. Note that some menus may not be available depending on the country.
Example: *https://product-selection.grundfos.com/uk*

Pos.	Description
1	**Products & services** enables you to find products and documents by typing a product number or name into the search field.
2	**Applications** enables you to choose an application to see how Grundfos can help you design and optimize your system.
3	**Products A-Z** enables you to look through a list of all the Grundfos products.
4	**Categories** enables you to look for a product category.
5	**Liquids** enables you to find pumps designed for aggressive, flammable or other special liquids.
6	**Product replacement** enables you to find a suitable replacement.
7	**WWW** enables you to select the country, which changes the language, the available product range and the structure of the website.
8	**Sizing** enables you to size a product based on your application and operating conditions.

9. Document quality feedback

To provide feedback about this document, scan the QR-code using your phone's camera or a QR code app.

Click here to submit your feedback

© Grundfos Holding A/S 04.2026

98553150

ECM: 1448499	04.2026

Grundfos Holding A/S
Poul Due Jensens Vej 7
DK-8850 Bjerringbro
Tel: +45 87 50 14 00
www.grundfos.com

GRUNDFOS