ALPHA1 L

Circulator pumps
50/60 Hz

be
think
innovate

GRUNDFOS

Table of contents

1. Product introduction 3
Product description 3
System applications 4
ALPHA1 L performance range 5

2. Construction. 6
Exploded view and sectional view 7
Material specification 7

3. Operating conditions 8
Technical data 8
Pumped liquids 9
Liquid temperature 9
Inlet pressure 9
Electrical data. 9

4. Installation and startup 10
Pump positions 10
Power supply positions 10
Power supply connection 10
Startup 10

5. Operating the product 11
Operating panel and display 11
Setting the pump 11

6. Control modes 12
Radiator heating mode 12
Underfloor heating mode 12
Constant curve / constant speed control. 12
Overview of pump performance 13
Control signal 14
Advantages of pump control 16

7. Guide to performance curves 17
Curve conditions 17

8. Performance curves and technical data. . . 18
ALPHA1 L xx-40 18
ALPHA1 L xx-60 19
ALPHA1 L xx-65 20
ALPHA1 L xx-80 21

9. Accessories 22
Unions and valve kits 22
Insulating shells 22
Control box connections 23
Cables and plugs 23

10. Product numbers 24
International market 24
Irish market 24
EAC market 24

11. Grundfos Product Center 25

Product introduction

ALPHA1_L_180

Type key

Example ALPHA1 L 25-40 180

Code	Explanation
ALPHA1 L	Pump range
25 -	Nominal diameter (DN) of inlet and outlet ports [mm]
40	Maximum head [dm]
	[ ]: Cast-iron pump housing
180	Port-to-port length [mm]

Product description

ALPHA1 L can be used as stand-alone or integrated circulator pump in existing systems as replacement or in new heating systems with either variable or constant flow rate.

The speed can be controlled by a low-voltage PWM (Pulse Width Modulation) signal.

High-efficiency ECM (Electronically Commutated Motor) pumps, such as ALPHA1 L, must not be speed-controlled by an external speed controller varying or pulsing the supply voltage.

Features and benefits

- three constant-curves/constant-speed curves.
- radiator heating mode.
- underfloor heating mode.
- speed control via a low-voltage PWM (Pulse Width Modulation) signal profile A (heating). The PWM signal is a method for generating an analog signal using a digital source.
- low EEI (Energy Efficiency Index).
- deblocking device.
- maintenance-free.
- low noise level.
- very simple installation.

System applications

ALPHA1 L is designed for circulating liquids in heating systems.

The pumps are suitable for the following systems:

- systems with constant or variable flows where it is desirable to optimise the pump duty point
- installation in existing systems where the differential pressure of the pump is too high during periods of reduced flow demand
- installation in new systems for automatic adjustment of the performance to flow demands without the use of bypass valves or similar expensive components.

Examples of systems

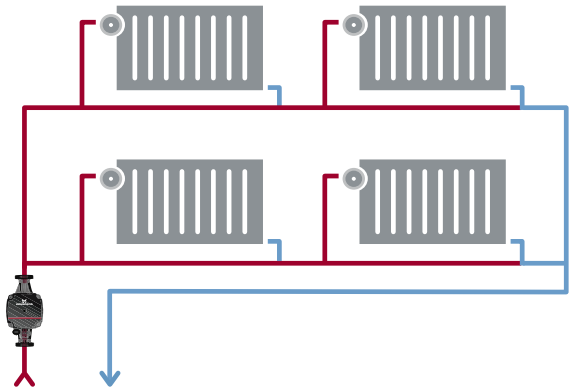

One-pipe heating system

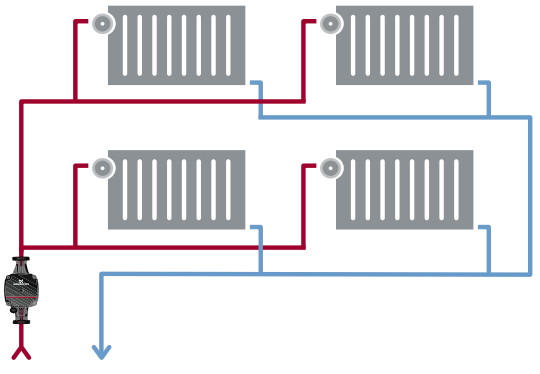

Two-pipe heating system

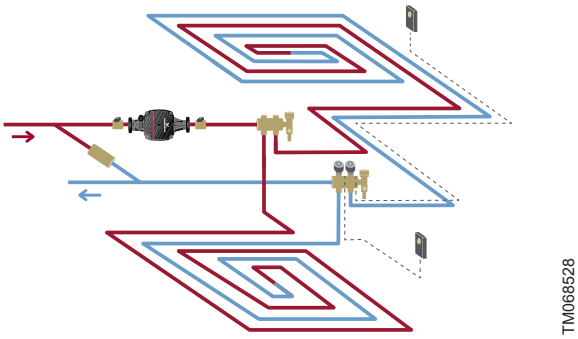

Underfloor heating system

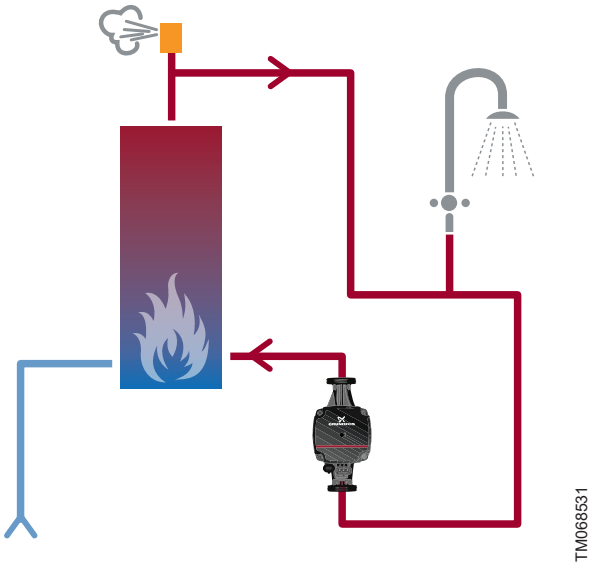

Domestic hot-water recirculation system

ALPHA1 L performance range

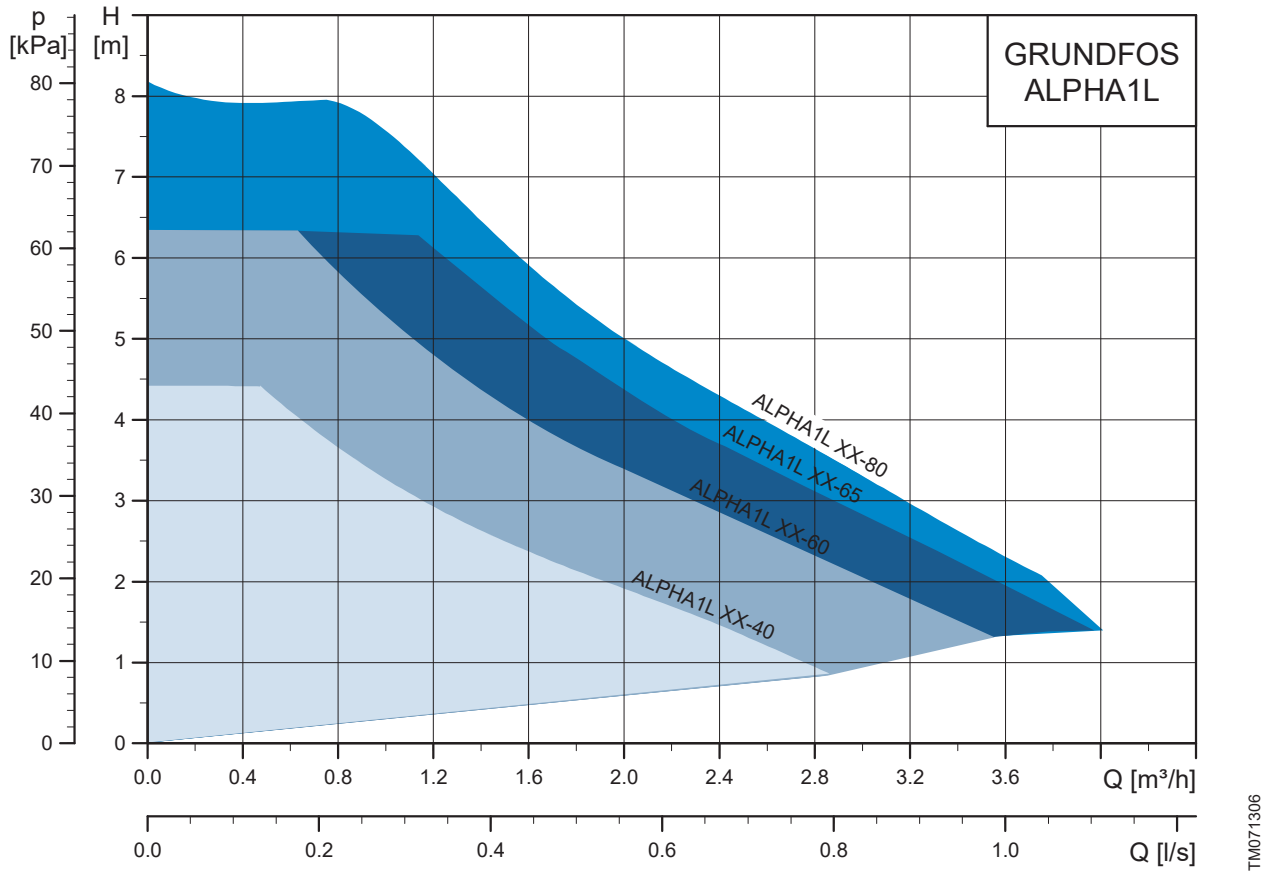

Construction

ALPHA1 L pumps are of the canned-rotor type as pump and motor form an integral unit without shaft seal and with only one gasket for sealing and four screws for fastening the stator housing to the pump housing. The bearings are lubricated by the pumped liquid as the rotor can is filled with water. The focus has been on using eco-friendly materials as well as on limiting the number of materials.

These constructions ensure maintenance-free operation.

The pump is characterised by the following:

- permanent-magnet/compact-stator motor which contributes to high efficiency
- ceramic shaft and radial bearings which contribute to long life
- carbon thrust bearing which contribute to long life
- stainless-steel rotor can, bearing plate and rotor cladding which contribute to corrosion-free long life
- composite impeller which contributes to corrosion-free long life
- cast-iron pump housing which contributes to flexibility
- the pump is self-venting through the system for easy startup
- compact design featuring pump head with integrated power supply operating panel which fit into most common installations.

Exploded view and sectional view

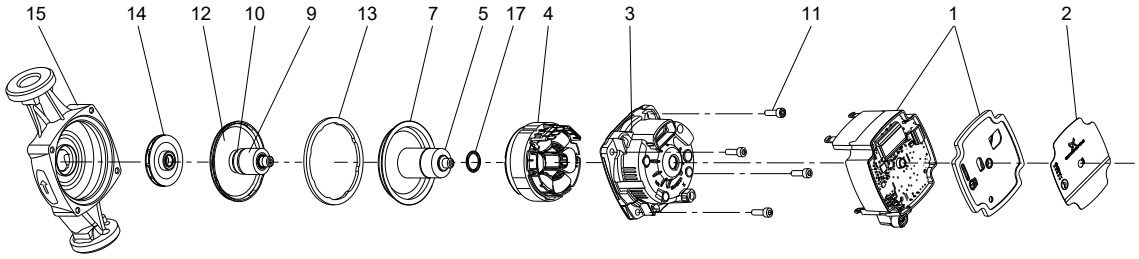

ALPHA1 L exploded view

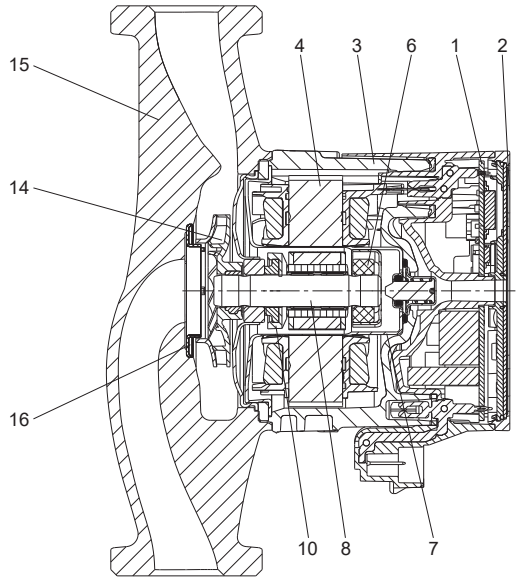

ALPHA1 L sectional view

Material specification

Pos.	Component	Material	EN/DIN
1	Control box	Composite PC-GF10 FR	
	Control electronics	PCB with SMD components	
2	Front foil	LEXAN 8A13F	
3	Stator housing	Aluminium, silumin	
4	Stator	Copper wire	
	Stator lamination	Laminated iron	
5	Push deblocking device		
	Plunger	Stainless steel	1.4404
	Spring	Stainless steel	1.4310
	Housing for spring	Stainless steel	1.4401
	Guide disc	Stainless steel	1.4401
	Housing for sealing	Stainless steel	1.4401
	Sealing	EPDM	
6	Radial bearing	Ceramics	
7	Rotor can	Stainless steel	1.4401

Pos.	Component	Material	EN/DIN
8	Shaft	Ceramics	
9	Rotor	NdFeB	
	Rotor tube	Stainless steel	1.4521
	Rotor cladding	Stainless steel	1.4401/1.4301
	Bush	Stainless steel	1.4301
10	Thrust bearing	Carbon	
	Thrust bearing retainer	EPDM	
11	Screws	Steel	
12	Bearing plate	Stainless steel	1.4301
13	Gasket	EPDM	
14	Impeller	Composite/PES 30 % GF	
15	Pump housing	Cast iron GG15	EN-GJL-150
16	Neck ring	Stainless steel	1.4301
17	O-ring	EPDM	

Operating conditions

Technical data

Operating conditions		
Sound pressure level	The sound pressure level of the pump is lower than 32 dB(A).	
Relative humidity	Maximum 95 %, non-condensing environment	
System pressure	Maximum 1.0 MPa (10 bar)	
Inlet pressure	Liquid temperature	Minimum inlet pressure
	75 °C	0.005 MPa (0.05 bar)
	95 °C	0.05 MPa (0.5 bar)
Maximum inlet pressure	1 MPa (10 bar)	
Ambient temperature	0-55 °C	
Liquid temperature	2-95 °C	
Liquid	Maximum water/propylene glycol mixture is 50 %	
Viscosity	Maximum 10 mm^2/s	
Maxmium altitude of installation	2000 m above sea level	
Electrical data		
Supply voltage	1 × 230 V - 15 %/+ 10 %, 50/60 Hz, PE	
Insulation class	F (EN 60335-1)	
Standby power consumption	< 1 W	
Inrush current	< 4 A	
Minimum switching time power on/off	No specific requirements	
Miscellaneous data		
Motor protection	The pump requires no external motor protection.	
Enclosure class	IPX4D	
Temperature class (TF)	TF95	
Specific EEI values	ALPHA1 L xx-40 ALPHA1 L xx-60 ALPHA1 L xx-65 ALPHA1 L xx-80	≤ 0.20

Pumped liquids

The pump is suitable for the following:

- clean, thin, non-aggressive and non-explosive liquids, not containing solid particles, fibres or mineral oil
- the pump must not be used for the transfer of flammable liquids, such as diesel oil, petrol and similar liquids
- in heating systems, the water must meet the requirements of accepted standards on water quality in heating systems, for example the German standard VDI 2035
- mixtures of water with antifreeze media such as glycol with a kinematic viscosity lower than 10 mm^2/s (10 cSt). When selecting a pump, the viscosity of the pumped liquid must be taken into consideration. If the pump is used for a liquid with a higher viscosity, the hydraulic performance of the pump is reduced.

Liquid temperature

The liquid temperature must be 2-95 °C.

To avoid condensation in the stator, the liquid temperature must always be higher than the ambient temperature.

Inlet pressure

To avoid cavitation noise and damage to the pump bearings, the following minimum pressures are required at the pump inlet port.

Liquid temperature	75 °C	95 °C
Pressure	0.005 MPa	0.05 MPa
	0.05 bar	0.5 bar

Electrical data

Reduced supply voltage

The pump operation is ensured above 160 VAC with reduced performance.

If the voltage falls below 190 VAC, a low-voltage warning is sent via the PWM signal.

If the voltage falls below 150 VAC, the pump stops and shows an alarm.

Additional protection

In case of an insulation fault, the fault current may be a pulsating DC. Observe national legislation about requirements for and selection of Residual Current Device (RCD) when installing the pump.

Installation and startup

Pump positions

Always install the pump with a horizontal motor shaft within ± 5 °. Do not install the pump with a vertical motor shaft. See fig. Pump positions, bottom row.

- Pump installed correctly in a vertical pipe. See fig. Pump positions, top row, left.
- Pump installed correctly in a horizontal pipe. See fig. Pump positions, top row, right.

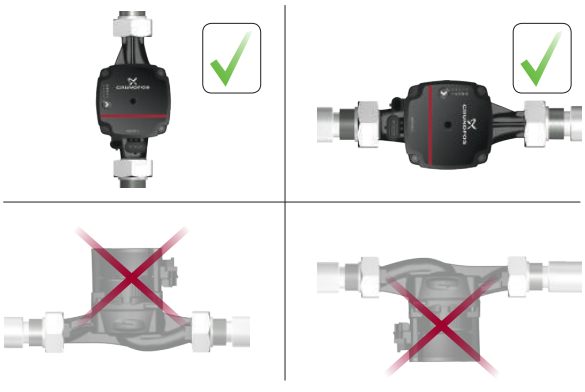

Pump positions

Power supply positions

The control box can be mounted in all positions.

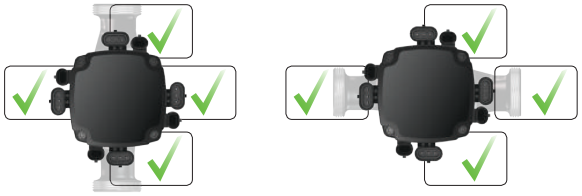

Possible control box positions

Power supply connection

The circulator pump must be connected to the power supply with the installer plug. See figs Installer plug and Installer plug in pump.

Installer plug

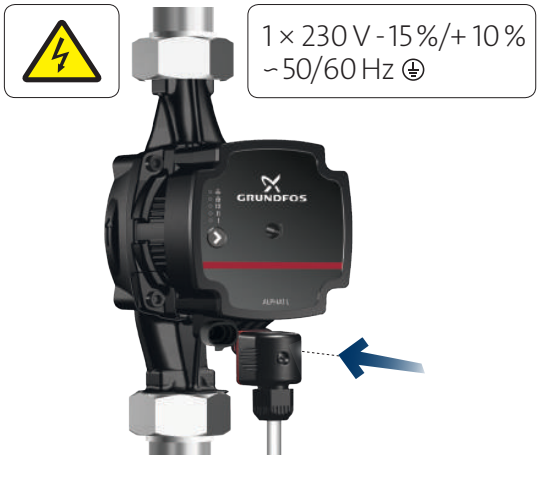

Installer plug in pump

Startup

The pump must not be started until the system has been filled with liquid and vented. Furthermore, the required minimum inlet pressure must be available at the pump inlet. The system cannot be vented through the pump. The pump is self-venting and does not have to be vented before startup. Air inside the pump is transported by the liquid into the system shortly after startup.

Operating the product

Operating panel and display

The operating panel is designed with a single button, one red/green LED and four yellow LEDs.

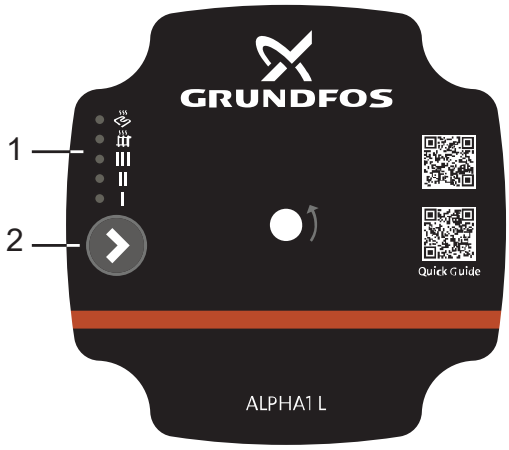

ALPHA1 L XX-40/60/65

ALPHA1 L 25-65

TM070761

Operating panel with one button and five LEDs

Pos.	Description
1	LEDs showing: • Settings view, after pressing the button • Alarm or warning
2	Button for setting the product.

Alarm or warning

If the circulator pump has detected one or more alarms or warnings, the first LED switches from green to red. When an alarm is active, the LEDs indicate the type of alarm or warning.

Operating panel	Alarm or warning
	Alarm: The pump stops. The pump is blocked.
	Warning: The pump keeps running. The supply voltage is low.
	Alarm: The pump stops. Electrical error (the pump stops).

LEDs on the operating panel showing the alarm or warning

Setting the pump

Using the button on the operating panel, the electronically controlled pump can be set to three constant-speed curves, radiator heating mode, or underfloor heating mode.

The PWM profile A input-signal control mode is enabled when the signal cable is plugged in and a signal is detected. Fixed proportional-pressure mode is selected by pressing and holding the button for three seconds.

Operating panel	Control mode
	Constant curve I
	Constant curve II
	Constant curve III
	Radiator heating mode
	Underfloor heating mode
	PWM profile A The LED flashes.
	Fixed proportional-pressure curve The LEDs flash.

LEDs on the operating panel showing the control mode

Control modes

Application	Control mode
Floor heating	Underfloor heating mode
Two-pipe system	Radiator heating mode
Ventilation	Speed I, II or III
Boiler-shunt	
One-pipe system	
Boiler (integrated)	
Domestic hot water	

Related information

Overview of pump performance

Radiator heating mode

TM067293

Radiator heating mode

The radiator heating mode adjusts the pump's performance to the actual heat demand in the system following a proportional-pressure curve. See figure below and Overview of pump performance for further information.

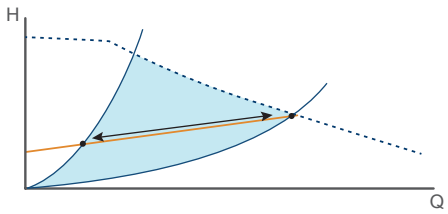

TM068815

Proportional-pressure curve

Related information

Overview of pump performance

Underfloor heating mode

TM067294

The underfloor heating mode adjusts the pump's performance to the actual heat demand in the system following a constant-pressure curve. See fig. Constant-pressure curve and Overview of pump performance on page Overview of pump performance for further information.

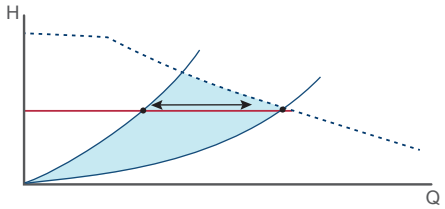

TM068816

Constant-pressure curve

Related information

Overview of pump performance

Constant curve / constant speed control

TM070766

At constant curve / constant speed operation, the pump runs at a constant speed, independent of the actual flow demand in the system. The pump performance follows the selected performance curve I, II or III. See fig. Three constant-curve/constant-speed settings where II has been selected. See Overview of pump performance on page Overview of pump performance for further information.

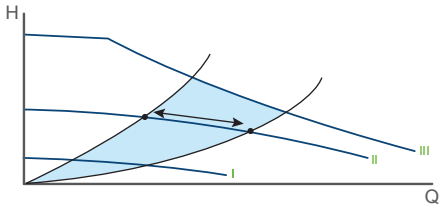

TM068822

Three constant-curve/constant-speed settings

The selection of the right constant-curve/constant-speed setting depends on the characteristics of the heating system in question and the number of taps likely to be opened at the same time.

Related information

Overview of pump performance

Overview of pump performance

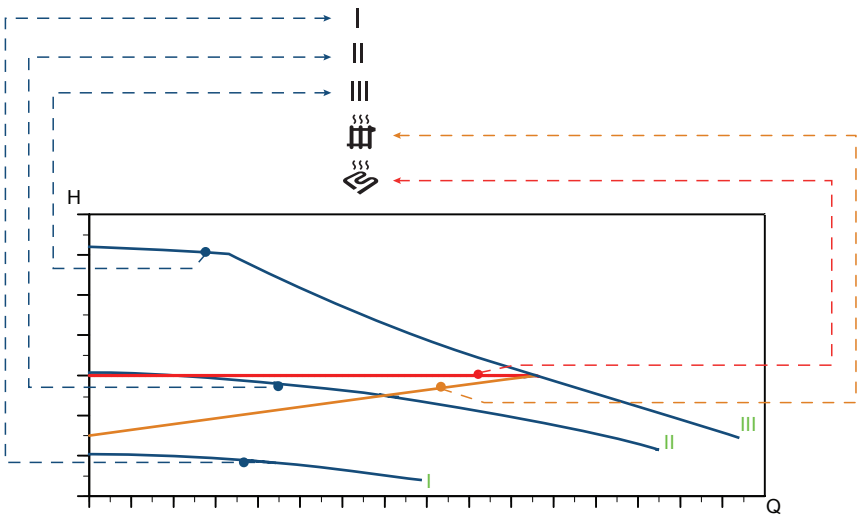

Pump setting in relation to performance

Setting	Pump curve	Function
	Proportional-pressure curve	The duty point of the pump will move up or down on a proportional-pressure curve, depending on the heat demand in the system. The head (pressure) is reduced at falling heat demand and increased at rising heat demand.
	Constant-pressure curve	The duty point of the pump will move out or in the constant-pressure curve, depending on the heat demand in the system. The head (pressure) is kept constant, irrespective of the heat demand.
III	Speed III	The pump runs at a constant speed and consequently on a constant curve. At speed III, the pump is set to run on the maximum curve under all operating conditions. Quick venting of the pump can be obtained by setting the pump to speed III for a short period.
II	Speed II	The pump runs at a constant speed and consequently on a constant curve. At speed II, the pump is set to run on the intermediate curve under all operating conditions.
I	Speed I	The pump runs at a constant speed and consequently on a constant curve. At speed I, the pump is set to run on the minimum curve under all operating conditions.

Control signal

The pump can be controlled via a digital low-voltage pulse-width modulation (PWM) signal.

The square-wave PWM signal is designed for a 100 to 4000 Hz frequency range. The PWM signal is used to select the speed (speed command) and as feedback signal. The PWM frequency on the feedback signal is fixed at 75 Hz in the pump.

For instructions on how to set the connection, see section Setting the pump.

Related information

Setting the pump

Duty cycle

d % = 100 × t/T

Example	Rating
T = 2 ms (500 Hz)	U_{iH} = 4-24 V
t = 0.6 ms	U_{iL} ≤ 1 V
d % = 100 × 0.6 / 2 = 30 %	I_{iH} ≤ 10 mA (depending on U_{iH})

Example

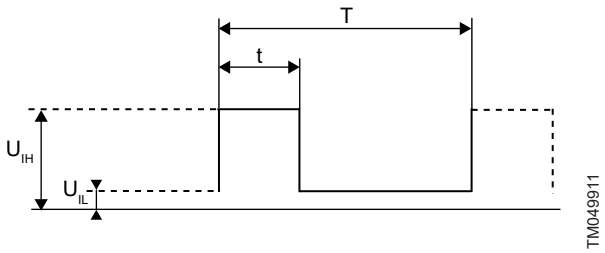

PWM signal

Abbreviation	Description
T	Period of time [sec.]
d	Duty cycle [t/T]
U_{iH}	High-level input voltage
U_{iL}	Low-level input voltage
I_{iH}	High-level input current

Interface

The pump's interface consists of an electronic part connecting the external control signal to the pump. The interface translates the external signal into a signal type that the microprocessor can understand.

In addition, the interface ensures that the user cannot get into contact with dangerous voltage if touching the signal wires when power is connected to the pump.

Note: "Signal ref." is a signal reference with no connection to protective earth.

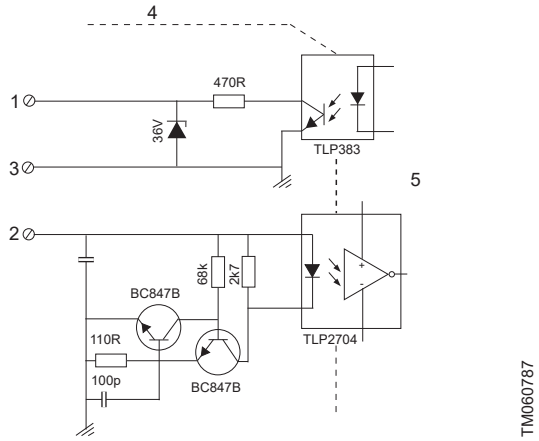

Schematic drawing, interface

Pos.	Description
1	PWM output
2	PWM input
3	Signal ref.
4	Galvanic isolation
5	Pump electronics

PWM input signal profile A (heating)

The pump runs on constant speed curves depending on the PWM input signal.

At high PWM signal percentages (duty cycles), a hysteresis prevents the pump from starting and stopping if the input signal fluctuates around the shifting point. At low PWM signal percentages, the pump speed is high for safety reasons. If no PWM signal is available, you can set ALPHA1 L to radiator heating mode, underfloor heating mode or constant speed, by the operating panel.

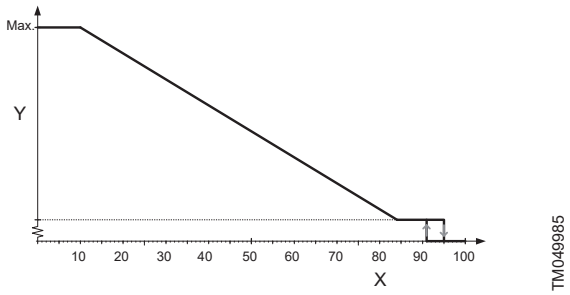

PWM input profile A (Heating)

Pos.	Description
X	PWM input signal [%]
Y	Speed

PWM input signal [%]	Pump status
≤ 10	Maximum speed: max.
> 10 / ≤ 84	Variable speed: min. to max.
> 84 / ≤ 91	Minimum speed: min.
> 91/95	Hysteresis area: on/off
> 95 / ≤ 100	Standby mode: off

PWM feedback signal

The PWM feedback signal offers pump information like in BUS systems:

- current power consumption (accuracy ± 2 % of PWM signal)
- warning
- alarm.

Alarms

Alarm output signals are available because some PWM output signals are dedicated to alarm information. If a supply voltage is measured below the specified supply voltage range, the output signal is set to 75 %. If the rotor is locked due to deposits in the hydraulics, the output signal is set to 90 % because this alarm has a higher priority. See fig. PWM feedback signal - power consumption.

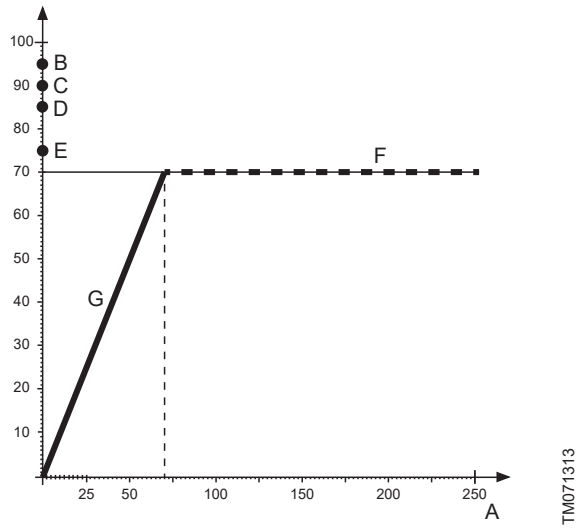

PWM feedback signal - power consumption

Pos.	Description
A	Power [W]
B	Standby (stop)
C	Alarm stop: fault, blocked pump
D	Alarm stop: electrical fault
E	Warning
F	Saturation at 70 Watt
G	Slope: 1 W / %PWM

Data

Maximum rating	Symbol	Value
PWM frequency input with high-speed optocou-pler	f	100-4000 Hz
Guaranteed standby power consumption		< 1 W
Rated input voltage - high level	U_{iH}	4-24 V
Rated input voltage - low level	U_{iL}	< 1 V
High-level input current	I_{iH}	< 10 mA
Input duty cycle	PWM	0-100 %
PWM frequency output, open collector	f	75 Hz ± 5 %
Accuracy of output signal regarding power con-sumption	-	± 2 % (of PWM signal)
Output duty cycle	PWM	0-100 %
Collector emitter breakdown voltage on output transistor	U_c	< 70 V
Collector current on output transistor	I_c	< 50 mA
Maximum power dissipation on output resistor	P_R	125 mW
Zener diode working voltage	U_z	36 V
Maximum power dissipation in Zener diode	P_z	300 mW

Advantages of pump control

In ALPHA1 L, control is effected by adapting the differential pressure to the flow (proportional- and constant-pressure control).

Contrary to an uncontrolled pump, the proportional-pressure-controlled ALPHA1 L pump reduces the differential pressure in case of falling heating demand.

If the heating demand falls, for instance due to solar radiation, the radiator valves will close, and, for the uncontrolled pump, the flow resistance of the system will rise for instance from A_1 to A_2.

In a heating system with an uncontrolled pump, this situation will cause a pressure rise in the system by ΔH_1.

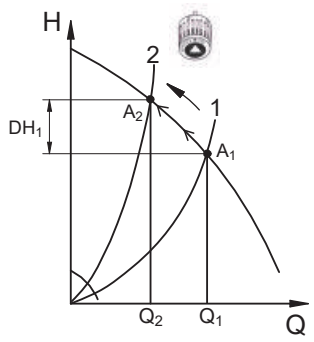

TM019119

Uncontrolled pump

In a system with a ALPHA1 L pump which is set to radiator heating mode, the pressure will be reduced by ΔH_2.

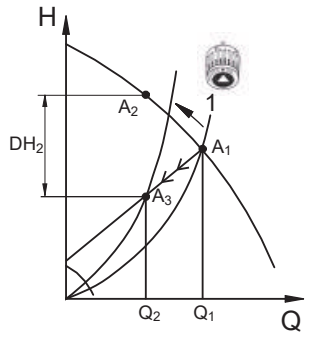

TM019120

Pump in proportional-pressure control mode

In a system with an uncontrolled pump, a pressure rise will often cause flow-generated noise in the thermostatic valves. This noise will be reduced considerably with ALPHA1 L.

Guide to performance curves

Each pump has its own performance curve.

A power curve, P1, belongs to each performance curve. The power curve shows the pump power consumption in watt at a given performance.

Curve conditions

The guidelines below apply to the performance curves on the following pages:

- Test liquid: airless water.
- The curves apply to a density of ρ = 983.2 kg/m^3 and a liquid temperature of 60 °C.
- All curves show average values and should not be used as guarantee curves. If a specific minimum performance is required, individual measurements must be made.
- The curves apply to a kinematic viscosity of u = 0.474 mm^2/s (0.474 cSt).
- EEI obtained according to EN 16297 part 3.

The pump is energy-optimised and complies with the EuP Directive, Commission Regulation (EC) No 641/2009 and 622/2012, which has been effective as from 1 January 2013.

For ALPHA1 L pumps, the energy efficiency index (EEI) is ≤ 0.20.

Figure EEI limits and the current positioning of the ALPHA1 L shows the energy efficiency index for an ALPHA1 L pump compared to the various EEI limits.

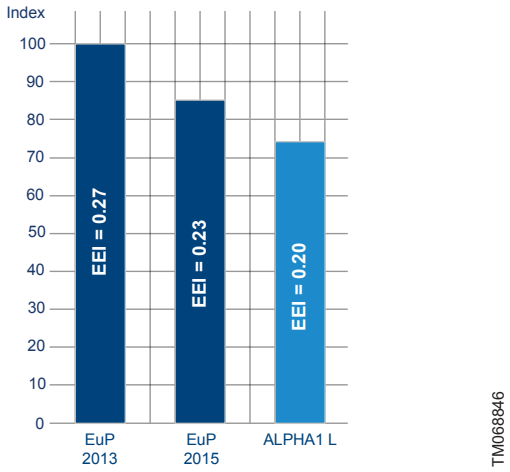

EEI limits and the current positioning of the ALPHA1 L

With an energy efficiency index (EEI) below the EuP 2015 requirement level, you can achieve considerable energy savings compared to a typical circulator pump and thus a remarkably fast return on investment.

Performance curves and technical data

ALPHA1 L xx-40

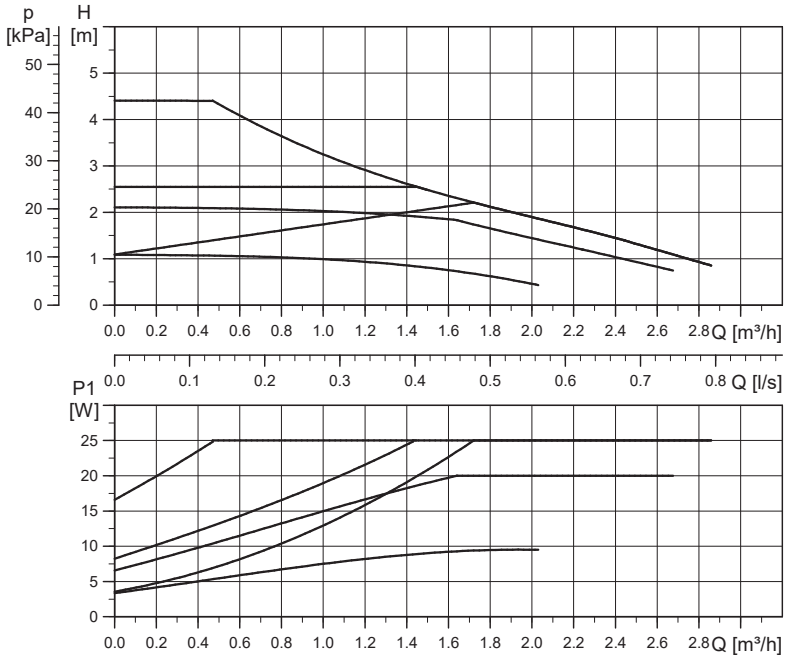

TM070797

Speed	P1 [W]	I_1 [A]
Min.	4	0.05
Max.	25	0.26
The pump incorporates overload protection.		

Liquid temperature: 2-95 °C (TF 95).
System pressure: Maximum 1.0 MPa (10 bar).
Specific EEI: ≤ 0.20

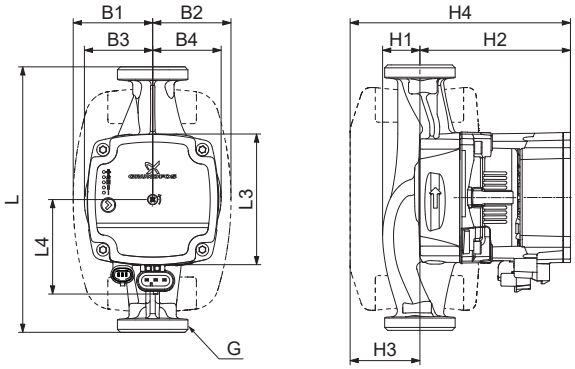

TM071242

Pump type	Dimensions [mm]												Weights [kg]		Ship. vol.
	L	L3	L4	B1	B2	B3	B4	H1	H2	H3	H4	G	Net	Gross	[m³]
ALPHA1 L 15-40	130	88	72	54	54	46	47	25	102	47	149	G 1	1.9	2.1	0.004
ALPHA1 L 20-40	130	88	72	54	54	46	47	25	102	47	149	G 1 1/4	1.9	2.1	0.004
ALPHA1 L 25-40	130	88	72	54	54	46	47	25	102	47	149	G 1 1/2	2.1	2.4	0.004
ALPHA1 L 25-40	180	88	72	54	54	46	46	25	102	47	149	G 1 1/2	2.2	2.5	0.004
ALPHA1 L 32-40	180	88	72	54	54	46	48	26	102	47	149	G 2	2.3	2.6	0.004

ALPHA1 L xx-60

TM070798

Speed	P1 [W]	I_1 [A]
Min.	4	0.05
Max.	45	0.42
The pump incorporates overload protection.		

Liquid temperature: 2-95 °C (TF 95).
System pressure: Maximum 1.0 MPa (10 bar).
Specific EEI: ≤ 0.20

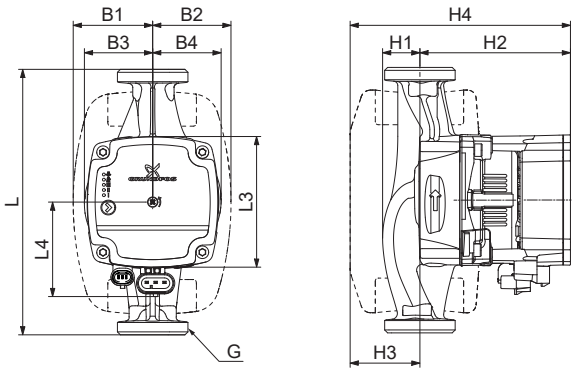

TM071242

Pump type	Dimensions [mm]												Weights [kg]		Ship. vol.
	L	L3	L4	B1	B2	B3	B4	H1	H2	H3	H4	G	Net	Gross	[m³]
ALPHA1 L 15-60	130	88	72	54	54	46	47	25	102	47	149	G 1	1.9	2.1	0.004
ALPHA1 L 20-60	130	88	72	54	54	46	47	25	102	47	149	G 1 1/4	1.9	2.1	0.004
ALPHA1 L 25-60	130	88	72	54	54	46	47	25	102	47	149	G 1 1/2	2.1	2.4	0.004
ALPHA1 L 25-60	180	88	72	54	54	46	46	25	102	47	149	G 1 1/2	2.2	2.5	0.004
ALPHA1 L 32-60	180	88	72	54	54	46	48	26	102	47	149	G 2	2.4	2.6	0.004

ALPHA1 L xx-65

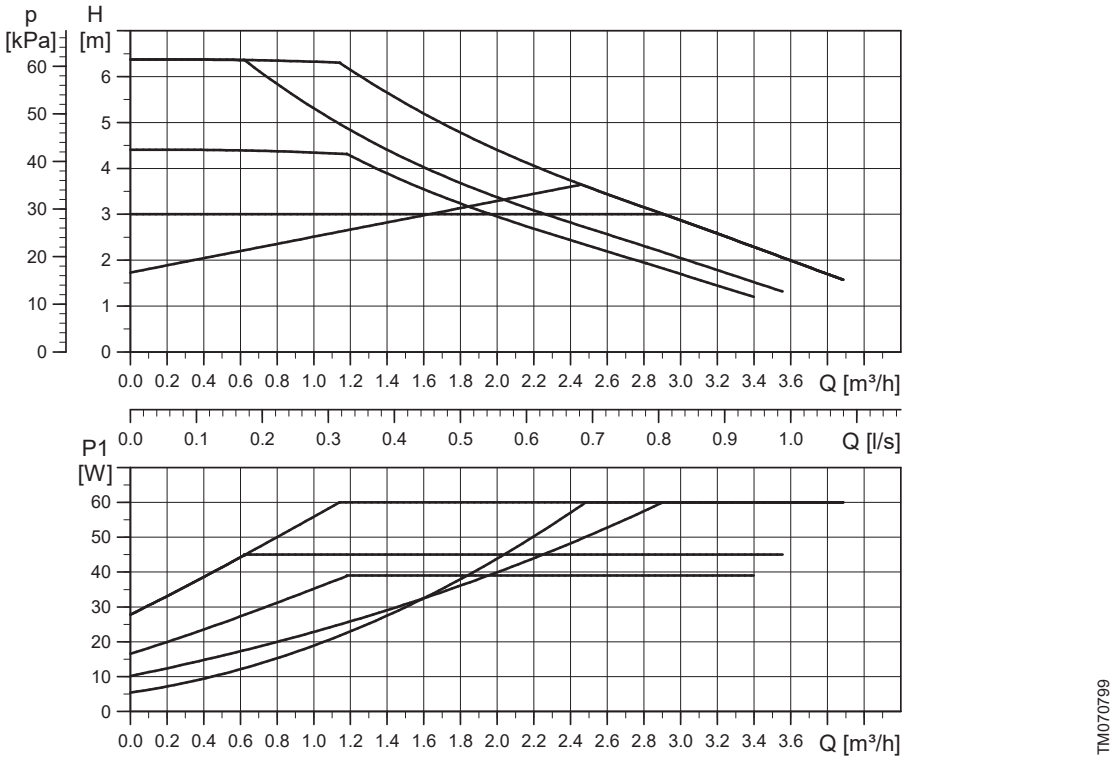

Speed	P1 [W]	I_1 [A]
Min.	4	0.05
Max.	60	0.52

The pump incorporates overload protection.

Liquid temperature: 2-95 °C (TF 95).
System pressure: Maximum 1.0 MPa (10 bar).
Specific EEI: ≤ 0.20

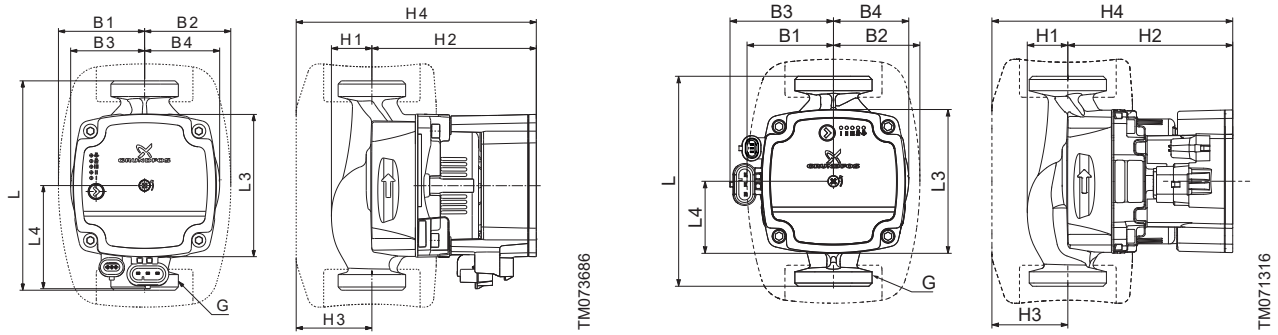

Left: ALPHA1 L 15-65, right: ALPHA1 L 25-65

Pump type	Dimensions [mm]												Weights [kg]		Ship. vol.
	L	L3	L4	B1	B2	B3	B4	H1	H2	H3	H4	G	Net	Gross	[m³]
ALPHA1 L 15-65	130	88	72	54	54	46	47	25	102	47	149	G 1	1.9	2.1	0.004
ALPHA1 L 25-65	130	89	45	54	54	72	47	25	102	47	149	G 1 1/2	2.0	2.2	0.004

ALPHA1 L xx-80

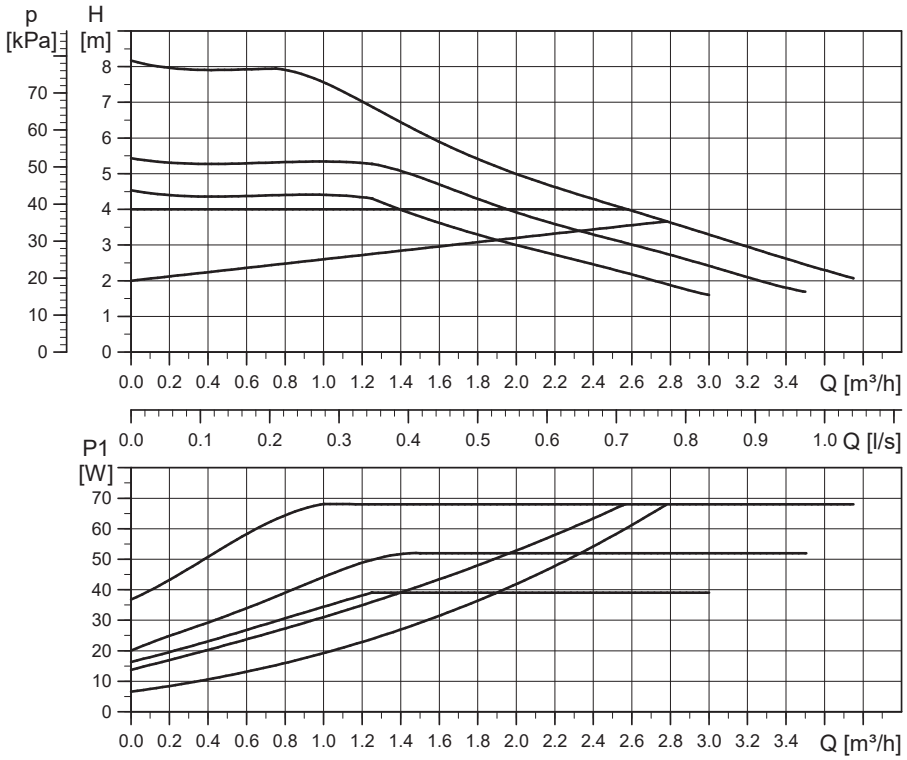

TM080226

Speed	P1 [W]	I_1 [A]
Min.	4	0.05
Max.	68	0.61

The pump incorporates overload protection.

Liquid temperature: 2-95 °C (TF 95).
System pressure: Maximum 1.0 MPa (10 bar).
Specific EEI: ≤ 0.20

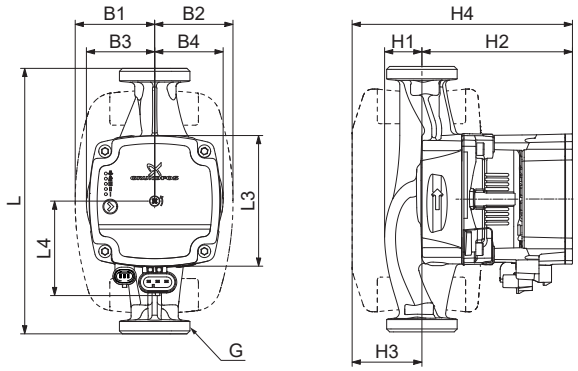

TM071242

ALPHA1 L xx-80

Pump type	Dimensions [mm]												Weights [kg]		Ship. vol.
	L	L3	L4	B1	B2	B3	B4	H1	H2	H3	H4	G	Net	Gross	[m³]
ALPHA1 L 25-80	180	88	72	54	54	46	46	25	102	47	149	G 1 1/2	2.6	2.7	0.004
ALPHA1 L 32-80	180	88	72	54	54	46	48	26	102	47	149	G 2	2.3	2.4	0.004

Accessories

Unions and valve kits

Product numbers, unions						
ALPHAx	Connection	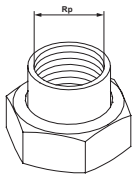			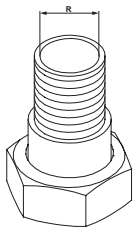	
		3/4	1	1 1/4	1	1 1/4
25-xx	G 1 1/2	529921	99672022	529821	529925	529924
32-xx	G 2		509921	99672033		

G-threads have a cylindrical form in accordance with the EN ISO 228-1 standard and are not sealing the thread. It requires a flat gasket. You can only screw cylindrical male G-threads, into female G-threads. The G-threads are standard thread on the pump housing.

R-threads are tapered external threads in accordance with the EN 10226-1 standard.

Rc- or Rp-threads are internal threads with either tapered or cylindrical threads. You can screw conical male R-threads into female Rc- or Rp-threads. See fig. G-threads and R-threads.

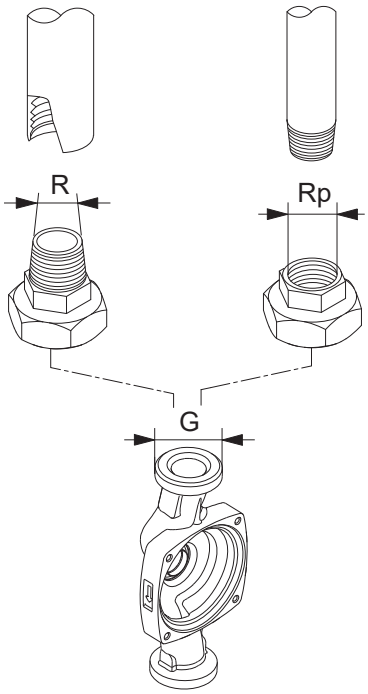

G-threads and R-threads

Insulating shells

The accessory set is tailored to the individual pump type. The insulating shells enclose the entire pump housing and are easy to fit around the pump.

Pump type	Product number
ALPHA1 L XX-XX	99270706

Control box connections

The ALPHA1 L control box has two electrical connections on one side: the power supply and signal connection.

Power supply connection

The installer plug is supplied with the pump and is available as an accessory.

Power cable adapters are also available as accessories.

Control signal connection

The control signal cable connection has three leads: signal input, signal output and signal reference. Connect the cable to the control box by a mini superseal plug, which can be supplied with the pump as an accessory. The cable length must not exceed 3 metres.

TM064414

Mini superseal plug

Conductor	Colour
Signal input	Brown
Signal reference	Blue
Signal output	Black

Cables and plugs

Product	Product description	Length [mm]	Product number
	Installer plug		99439948
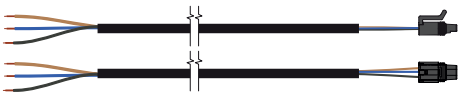	Mini superseal signal cable (PWM input signal)	2000	99165309
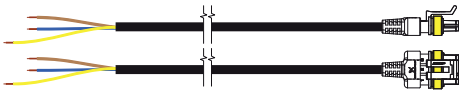	Superseal power cable	2000	99198990
	Power cable adapter: Superseal Molex cable adapt-er, overmoulded	150	99165311
	Power cable adapter: Superseal Volex cable adapter, overmoulded	150	99165312

Product numbers

Note: Click on the relevant product number, and go directly to the performance curve in Grundfos Product Center (GPC).

International market

Pump type	Product number	Data sheet Page
ALPHA1 L 15-40 130	99160550	*8.1 ALPHA1 L xx-40*
ALPHA1 L 15-60 130	99160574	*8.2 ALPHA1 L xx-60*
ALPHA1 L 15-65 130	99165123	*8.3 ALPHA1 L xx-65*
ALPHA1 L 20-40 130	99160575	*8.1 ALPHA1 L xx-40*
ALPHA1 L 20-60 130	99160577	*8.2 ALPHA1 L xx-60*
ALPHA1 L 25-40 130	99160578	*8.1 ALPHA1 L xx-40*
ALPHA1 L 25-40 180	99160579	*8.1 ALPHA1 L xx-40*
ALPHA1 L 25-60 130	99160583	*8.2 ALPHA1 L xx-60*
ALPHA1 L 25-60 180	99160584	*8.2 ALPHA1 L xx-60*
ALPHA1 L 32-40 180	99160587	*8.1 ALPHA1 L xx-40*
ALPHA1 L 32-60 180	99160590	*8.2 ALPHA1 L xx-60*

Irish market

Pump type	Product number	Data sheet Page
ALPHA1 L 25-65 130	99199582	*8.3 ALPHA1 L xx-65*

EAC market

Pump type	Product number	Data sheet Page
ALPHA1 L 25-40* 180	99199611	*8.1 ALPHA1 L xx-40*
ALPHA1 L 25-60* 180	99199612	*8.2 ALPHA1 L xx-60*
ALPHA1 L 25-80 180	92542563	*8.4 ALPHA1 L xx-80*
ALPHA1 L 32-40 180	99199613	*8.1 ALPHA1 L xx-40*
ALPHA1 L 32-60 180	99199614	*8.2 ALPHA1 L xx-60*
ALPHA1 L 32-80 180	99199614	*8.4 ALPHA1 L xx-80*

* 25-xx: Including union kit Rp 1"

Grundfos Product Center

Online search and sizing tool to help you make the right choice.
From the international view, you can select your specific country to view the product range available to you.
International view: *http://product-selection.grundfos.com*

All the information you need in one place

Performance curves, technical specifications, pictures, dimensional drawings, motor curves, wiring diagrams, spare parts, service kits, 3D drawings, documents, system parts. The Product Center displays any recent and saved items - including complete projects - right on the main page.

Downloads

On the product pages, you can download installation and operating instructions, data booklets, service instructions, etc., in PDF format.

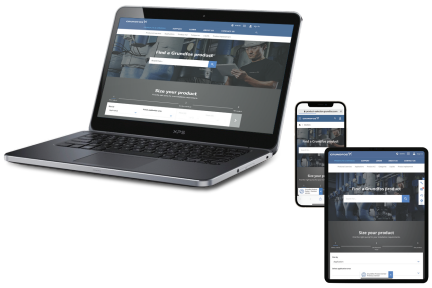

[redacted]

When you select your country, you will see the menus below. Note that some menus may not be available depending on the country.
Example: *https://product-selection.grundfos.com/uk*

Pos.	Description
1	**Products & services** enables you to find products and documents by typing a product number or name into the search field.
2	**Applications** enables you to choose an application to see how Grundfos can help you design and optimise your system.
3	**Products A-Z** enables you to look through a list of all the Grundfos products.
4	**Categories** enables you to look for a product category.
5	**Liquids** enables you to find pumps designed for aggressive, flammable or other special liquids.
6	**Product replacement** enables you to find a suitable replacement.
7	**WWW** enables you to select the country, which changes the language, the available product range and the structure of the website.
8	**Sizing** enables you to size a product based on your application and operating conditions.

be think innovate

© 2021 Grundfos Holding A/S, all rights reserved.

Trademarks displayed in this material, including but not limited to Grundfos, the Grundfos logo and "be think innovate" are registered trademarks owned by The Grundfos Group. All rights reserved.

99169580 **08.2021**

ECM: 1318390

GRUNDFOS