Looking ahead,
going beyond expectations

Ahead Beyond

EBARA

3E Series

Data Book 50Hz

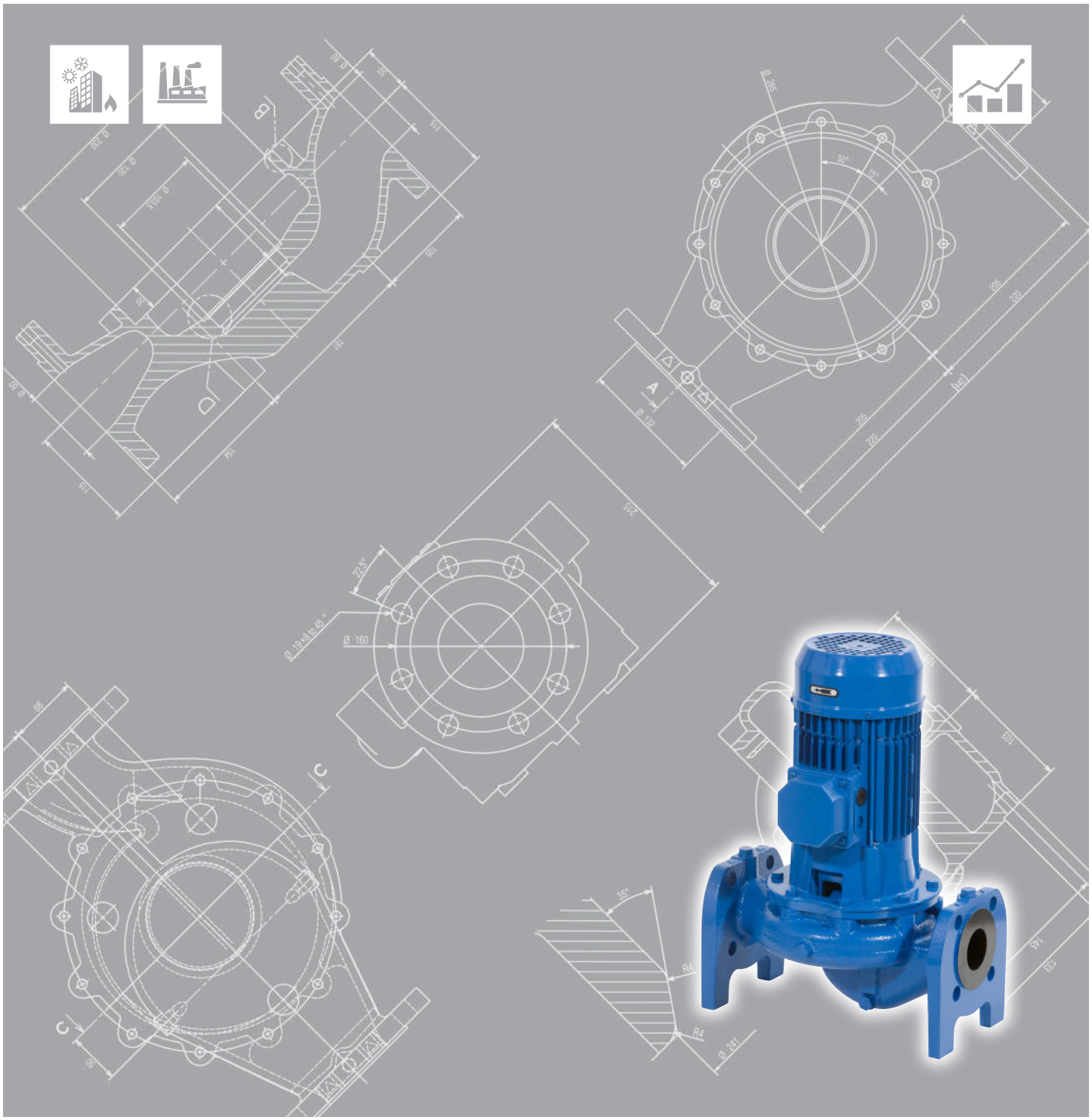

CONTENTS

50Hz

Rev.C

SPECIFICATION

PRODUCT FEATURES	201
MAIN APPLICATION	202
MODEL VARIATION	203
GENERAL SPECIFICATION PUMP	204
GENARAL SPECIFICATION MOTOR	205
PERFORMANCE RANGE 2 POLE	206
PERFORMANCE RANGE 4 POLE	207
SELECTION CHART 50Hz 2 POLE	208
SELECTION CHART 50Hz 4 POLE	209
TYPE KEY	210
PERFORMANCE CURVE SPECIFICATIONS	211
MEI INDEX SPECIFICATIONS	212
PERFORMANCE CURVE 2 POLE 32-125	213
PERFORMANCE CURVE 2 POLE 40-160	215
PERFORMANCE CURVE 2 POLE 40-200	216
PERFORMANCE CURVE 2 POLE 50-100	217
PERFORMANCE CURVE 2 POLE 50-125	218
PERFORMANCE CURVE 2 POLE 50-160	219
PERFORMANCE CURVE 2 POLE 50-200	220
PERFORMANCE CURVE 2 POLE 65-100	221
PERFORMANCE CURVE 2 POLE 65-125	222
PERFORMANCE CURVE 2 POLE 65-160	223
PERFORMANCE CURVE 2 POLE 65-200	224
PERFORMANCE CURVE 2 POLE 80-100	225
PERFORMANCE CURVE 2 POLE 80-160	227
PERFORMANCE CURVE 2 POLE 80-200	228
PERFORMANCE CURVE 2 POLE 100-160	229
PERFORMANCE CURVE 4 POLE 32-160	231
PERFORMANCE CURVE 4 POLE 32-200	232
PERFORMANCE CURVE 4 POLE 40-160	233
PERFORMANCE CURVE 4 POLE 40-200	234
PERFORMANCE CURVE 4 POLE 50-125	235
PERFORMANCE CURVE 4 POLE 50-160	236
PERFORMANCE CURVE 4 POLE 50-200	237
PERFORMANCE CURVE 4 POLE 65-125	238

CONTENTS 50Hz

Rev.C

PERFORMANCE CURVE 4 POLE 65-160 239
PERFORMANCE CURVE 4 POLE 65-200 240
PERFORMANCE CURVE 4 POLE 80-160 242
PERFORMANCE CURVE 4 POLE 80-200 243
PERFORMANCE CURVE 4 POLE 100-160 245

CONSTRUCTION

SECTIONAL VIEW DRAWING 3E 32-125,40-160,50-100/125/160,65-100/125,80-100 301
SECTIONAL VIEW TABLE 3E 32-125,40-160,50-100/125/160,65-100/125,80-100 302
SECTIONAL VIEW DRAWING 3E 40-200,65-160 303
SECTIONAL VIEW TABLE 3E 40-200,65-160 304
SECTIONAL VIEW DRAWING 3E 50-200,65-200,80-160/200,100-160 305
SECTIONAL VIEW TABLE 3E 50-200,65-200,80-160/200,100-160 306
SECTIONAL VIEW DRAWING 3ES 32-125,40-160,50-100/125/160,65-100/125,80-100 307
SECTIONAL VIEW TABLE 3ES 32-125,40-160,50-100/125/160,65-100/125,80-100 308
SECTIONAL VIEW DRAWING 3ES 40-200,65-160 309
SECTIONAL VIEW TABLE 3ES 40-200,65-160 310
SECTIONAL VIEW DRAWING 3ES 50-200,65-200,80-160/200,100-160 311
SECTIONAL VIEW TABLE 3ES 50-200,65-200,80-160/200,100-160 312
SECTIONAL VIEW DRAWING 3E4 32-160,40-160,50-125/160,65-125 313
SECTIONAL VIEW TABLE 3E4 32-160,40-160,50-125/160,65-125 314
SECTIONAL VIEW DRAWING 3E4 100-160 315
SECTIONAL VIEW TABLE 3E4 100-160 316
SECTIONAL VIEW DRAWING 3E4 32-200,40-200,65-160 317
SECTIONAL VIEW TABLE 3E4 32-200,40-200,65-160 318

CONTENTS

50Hz

Rev.C

SECTIONAL VIEW DRAWING 3E4 50-200,65-200,80-160/200	319
SECTIONAL VIEW TABLE 3E4 50-200,65-200,80-160/200	320
SECTIONAL VIEW DRAWING 3ES4 50-160,65-125	323
SECTIONAL VIEW TABLE 3ES4 50-160, 65-125	324
SECTIONAL VIEW DRAWING 3ES4 100-160	325
SECTIONAL VIEW TABLE 3ES4 100-160	326
SECTIONAL VIEW DRAWING 3ES4 32-200,40-200,65-160	329
SECTIONAL VIEW TABLE 3ES4 32-200,40-200,65-160	330
SECTIONAL VIEW DRAWING 3ES4 50-200,65-200,80-160/200	331
SECTIONAL VIEW TABLE 3ES4 50-200,65-200,80-160/200	332
BEARINGS 3E 2 POLE	333
BEARINGS 3E 4 POLE	334
BEARINGS 3ES 2 POLE	335
BEARINGS 3ES 4 POLE	336
MECHANICAL SEAL (Standard and Special version) 3E 3ES 2 POLE	337
MECHANICAL SEAL (Standard and Special version) 3E 3ES 2 POLE	338
MECHANICAL SEAL (Standard and Special version) 3E 3ES 4 POLE	339
COUPLING 3ES 2 POLE	342
COUPLING 3ES 4 POLE	343
BASE PLATE	344
COUNTER FLANGE＆GASKET EPDM	345

CONTENTS

50Hz

Rev.C

DIMENSION & WEIGHT

DIMENSIONS & WEIGHT 3E 2 POLE	346
DIMENSIONS & WEIGHT 3E 4 POLE	347
DIMENSIONS & WEIGHT 3ES 2 POLE	348
DIMENSIONS & WEIGHT 3ES 4 POLE	349
PACKING 3E - 2POLE	350
PACKING 3E - 4POLE	351
PACKING 3ES - 2POLE	352
PACKING 3ES - 4POLE	353

TECHNICAL DATA

3E MOTOR DATA 2 POLE	354
3E MOTOR DATA 4 POLE	355
3ES MOTOR DATA 2 POLE	356
3ES MOTOR DATA 4 POLE	357
NOISE DATA 3E-3ES 2POLE	358
NOISE DATA 3E-3ES 4POLE	359

PRODUCT FEATURES

Energy-saving design

- ✓ Major improvement over our previous models by impeller designed using our proprietary 3D inverse design technology.
- ✓ Higher efficiency means lower energy consumption and motor output, and more compact size.

Easy installation and simple maintenance

- ✓ Alignment is not required.
- ✓ Back pull-out structure enables disassembly and inspection without removal of suction and discharge piping.
- ✓ Shield bearings eliminate need for adding or exchanging lubricating oil.
- ✓ Shaft seal flushing piping not required for the standard application.
- ✓ Air-bleeding not required.
- ✓ Simplified shaft seal and “O” ring body seal enable easy assembly.

Pump specifications & features

- ✓ Maximum operating pressure: 1.6 MPa(*)
- ✓ Liquid temperature range expansion: -10℃ to 120℃
- ✓ Back pull-out design
- ✓ ring casing seal

International standards

- ✓ Pump dimensions adopt EN733
- ✓ Mechanical seal adopts EN12756
- ✓ Protector fitted in accordance with EN294.
- ✓ Electric motor conforms to IEC60072-1 and IEC60034-1

(*) Several models are 1.0MPa

MAIN APPLICATIONS

BUILDING SERVICE

- ✓ Air conditioning-district heating & cooling
- ✓ HVAC system
- ✓ General water supply
- ✓ Hot water circulation
- ✓ Pressure boosting

WATER SUPPLY

- ✓ Water supply duties for municipalities
- ✓ Heat station
- ✓ Irrigation
- ✓ Drainage clean water
- ✓ Fire protection
- ✓ Swimming pool
- ✓ Pressure boosting

OEM

- ✓ Air conditioner
- ✓ Chilling unit
- ✓ Boiler
- ✓ Heat exchanger
- ✓ Coolant unit
- ✓ Water circulation unit

MODEL VARIATION

Version		3E		3ES	
pole		2 pole	4 pole	2 pole	4 pole
Pump Size	32-125	◆	-	◆	-
	32-160	-	◆	-	-
	32-200	-	◆	-	◆
	40-100	-	-	-	-
	40-160	◆	◆	◆	-
	40-200	◆	◆	◆	◆
	50-100	◆	-	◆	-
	50-125	◆	◆	◆	-
	50-160	◆	◆	◆	◆
	50-200	◆	◆	◆	◆
	65-100	◆	-	◆	-
	65-125	◆	◆	◆	◆
	65-160	◆	◆	◆	◆
	65-200	◆	◆	◆	◆
	80-100	◆	-	◆	-
	80-125	-	-	-	-
	80-160	◆	◆	◆	◆
	80-200	◆	◆	◆	◆
	80-250	-	-	-	-
	100-160	◆	◆	◆	◆
	100-200	-	-	-	-
	100-250	-	-	-	-

GENERAL SPECIFICATION PUMP

PUMP						
Version			3E		3ES	
Pole			2 pole	4 pole	2 pole	4 pole
Liquid Handled	Type of liquid		Clean water[1], Brine(anti-freezing liquid), Water/Glycol mixture up to 40% vol. [2]			
	Temperature [°C]		-10 to 120			
Maximum working pressure [MPa]			1.0 or 1.6 [3]			
Maximum suction pressure [MPa]			1.0 or 1.6 - Shut-off pressure			
Construction	Impeller		Closed centrifugal type Closed centrifugal three dimensional blades for 65 and 80 version			
	Shaft seal type		Mechanical seal (with air ventiration system)			
	Bearing		Sealed ball bearing (Inside of the Motor)			
Pipe Connection	Suction and Discharge	32-100/125/160/200	Flange DN32 according EN 1092-1 Standard			
		40-100/125/160/200	Flange DN40 according EN 1092-1 Standard			
		50-100/125/160/200	Flange DN50 according EN 1092-1 Standard			
		65-100/125/160/200	Flange DN65 according EN 1092-1 Standard			
		80-100/125/160/200/250	Flange DN80 according EN 1092-1 Standard			
		100-160/200/250	Flange DN100 according EN 1092-1 Standard			
Material	Casing		Cast iron EN-GJL-250-EN 1561			
	Impeller	32,40,50,65 series,80-100	EN 1.4301 (AISI 304)			
		Other 80 series	EN 1.4401 (AISI 316)			
		100 series	EN 1.4404 (AISI 316L)			
	Casing cover	32,40,50,65,80 series	EN 1.4301 (AISI 304)			
		80-250,100 series	EN 1.4404 (AISI 316L) stainless casting			
	Mechanical seal		SiC/Carbon/EPDM as a standard(Q1AEGG) SiC/SiC/EPDM as an optional(Q4Q1EGG) SiC/SiC/FPM as an optional(Q4Q1VGG) SiC/Carbon/FPM as an optional(Q1AVGG) (For version see page 337÷339)			
	O-ring		EPDM as a standard FPM as an optional			
	Shaft	Designation	Extended shaft		Stub-shaft	
		32,40,50,65,80 series	EN 1.4301 (AISI 304) for wetted part Carbon steel for dry part		EN 1.4301 (AISI 304) for wetted part Carbon steel for dry part	
		100 series	EN 1.4404 (AISI 316L) for wetted part Carbon steel for dry part		EN 1.4404 (AISI 316L) for wetted part Carbon steel for dry part	
	Bracket		Aluminium		Cast iron EN-GJL-250-EN 1561	
Accessory (upon request)			Counter Flange (See page 345) Base plate for 11kW or above			
Applicable standard of test			ISO 9906:2012 – Grade 3B			

[1] Viscosity and Dencity shall be equivalent with water

[2] If water-glycol mixtures are used, differents power consumption and pump performances shall be considered.

[3] Depending on the model. See selection chart page 208 and 209

GENERAL SPECIFICATION MOTOR

MOTOR				
Type	3E		3ES	
	Electric - TEFC			
	Three Phase			
Efficiency level (Reg. 640/2009)	"IE2 from 0.37 kW up to 0.55 kW IE3 from 0.75 kW up to 22 kW			
No. of Poles	2	4	2	4
Rotation speed [min-1]	～2900	～1450	～2900	～1450
Insulation Class	F (temperature rise class B)			
Protection degree (CEI EN 60034-5)	IP55			
Power rating [kW]	0.37 ÷ 22	0.37 ÷ 3.0	0.75 ÷ 22	0.55 ÷ 3.0
Power rating [HP]	0.5 ÷ 30	0.5 ÷ 4.0	1 ÷ 30	0.75 ÷ 4.0
Frequency [Hz]	50			
Voltage [V]	230/400 ±10% (up to 4.0 kW) 400/690 ±10% (5.5 kW and above)			
Over load protection	Provided by the user			
Casing material	Aluminium			
Motor support material	Cast iron / Aluminium			
Dimensions of cable entry	PG11, PG13.5, PG16, PG21 M20x1.5, M25x1.5		M32x1.5, M40x1.5, M50x1.5 M10x1.5, M20x1.5, M25x1.5	
Flange mount (IEC motor)	---		IM B5	

PERFORMANCE RANGE 2 POLE

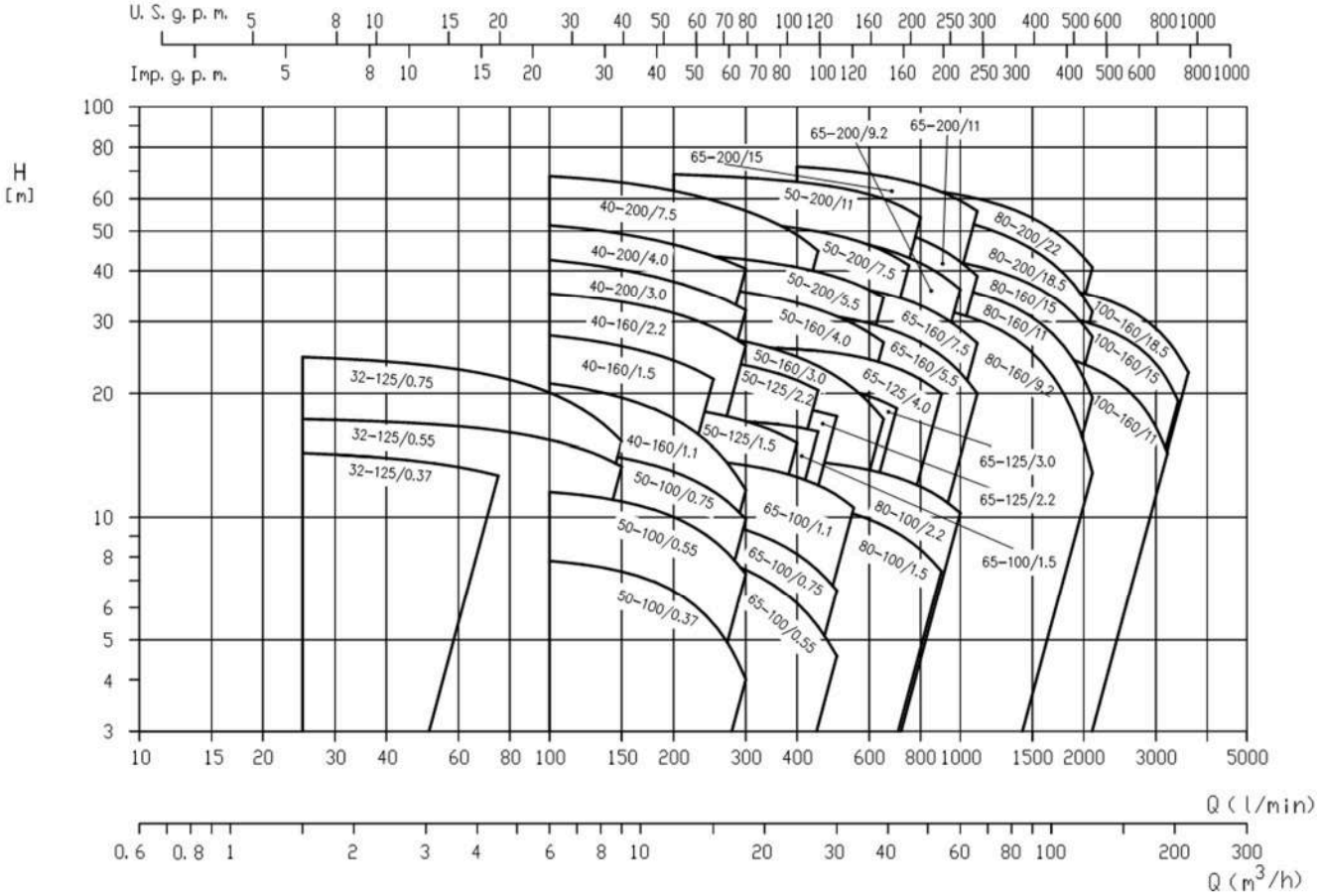

PERFORMANCE RANGE 4 POLE

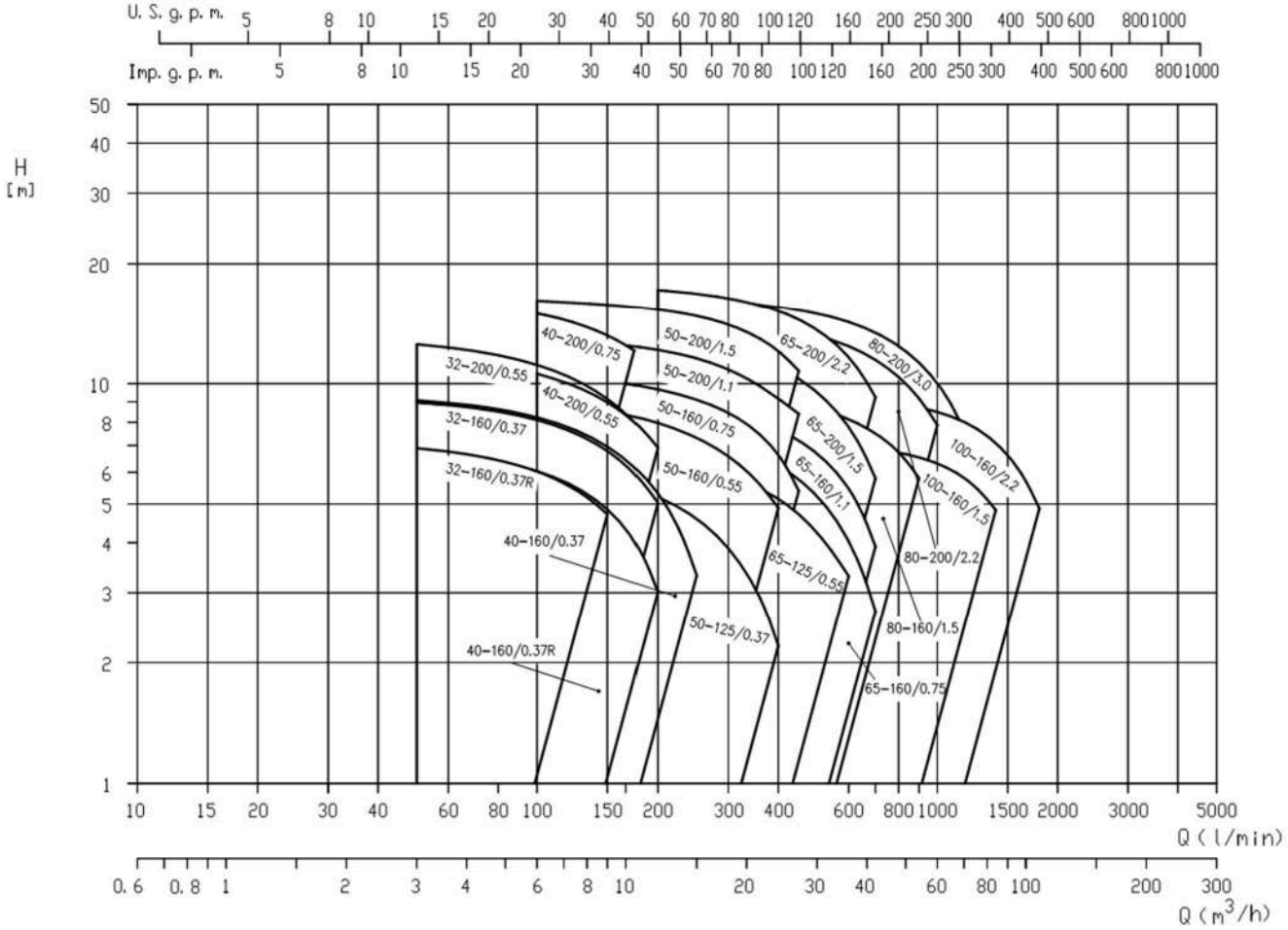

SELECTION CHART 2 POLE

3E SERIES 32 SIZE

Pump type	kW	HP	Max working pressure (MPa)	l/min	0	25	50	75	100	125	150
				m^3/h	0	1.5	3	4.5	6	7.5	9
32-125/0.37	0.37	0.5	1.0		14.8	14.3	13.6	12.6	—	—	—
32-125/0.55	0.55	0.75	1.0		17.5	17.3	16.8	16.2	15.4	14.4	13.3
32-125/0.75	0.75	1	1.0		25.2	24.5	23.4	21.9	20.0	17.8	15.3

3E SERIES 40 SIZE

Pump type	kW	HP	Max working pressure (MPa)	l/min	0	100	150	200	250	300	400	450
				m^3/h	0	6	9	12	15	18	24	27
40-160/1.1	1.1	1.5	1.6		22.6	21.1	19.5	17.4	14.7	11.6	—	—
40-160/1.5	1.5	2	1.6		29.6	27.7	26.1	24	21.6	—	—	—
40-160/2.2	2.2	3	1.6		36.5	35.1	33.5	31.4	29.0	26.1	—	—
40-200/3.0	3	4	1.6		44.5	42.5	40.2	37.6	34.9	31.9	—	—
40-200/4.0	4	5.5	1.6		52.9	51.6	49.2	46.4	43.4	40.5	—	—
40-200/7.5	7.5	10	1.6		68.5	68.0	65.7	62.7	59.4	56.0	48.9	44.8

3E SERIES 50 SIZE

Pump type	kW	HP	Max working pressure (MPa)	l/min	0	100	200	300	400	450	500	650	750	800
				m^3/h	0	6	12	18	24	27	30	39	45	48
50-100/0.37	0.37	0.5	1.0		7.9	7.8	6.5	4.0	—	—	—	—	—	—
50-100/0.55	0.55	0.75	1.0		11.5	11.5	10.0	7.2	—	—	—	—	—	—
50-100/0.75	0.75	1	1.0		15.0	14.6	12.9	9.9	—	—	—	—	—	—
50-125/1.5	1.5	2	1.6		18.9	19.2	18.5	17.1	15.1	—	—	—	—	—
50-125/2.2	2.2	3	1.6		25.4	25.3	24.7	23.4	21.5	20.3	—	—	—	—
50-160/3.0	3	4	1.6		30.4	—	28.5	26.7	24.5	23.3	21.9	17.3	—	—
50-160/4.0	4	5.5	1.6		38.8	—	37.1	35.4	33.3	32.1	30.8	26.6	—	—
50-200/5.5	5.5	7.5	1.6		45.7	—	44	42.6	40.8	39.7	38.6	34.4	—	—
50-200/7.5	7.5	10	1.6		56.0	—	53.6	52.4	50.8	49.9	48.8	44.7	41.2	—
50-200/11	11	15	1.6		70.8	—	68.7	67.5	65.9	65.0	63.9	59.9	56.2	54.0

3E SERIES 65 SIZE

Pump type	kW	HP	Max working pressure (MPa)	l/min	0	100	150	200	250	400	450	500	550	700	900	1000	1100
				m^3/h	0	6	9	12	15	24	27	30	33	42	54	60	66
65-100/0.55	0.55	0.75	1.0		9.4	9.0	8.7	8.4	7.9	6.1	5.3	4.5	—	—	—	—	—
65-100/0.75	0.75	1	1.0		11.2	10.7	10.5	10.1	9.7	8.1	7.4	6.6	—	—	—	—	—
65-100/1.1	1.1	1.5	1.0		15.0	14.4	14.2	13.9	13.7	12.5	11.9	11.3	10.5	—	—	—	—
65-100/1.5	1.5	2	1.0		18.6	17.7	17.5	17.3	17.2	16.5	16.1	—	—	—	—	—	—
65-125/2.2	2.2	3	1.6		19.4	—	19.5	19.5	19.3	18.4	18.0	17.6	—	—	—	—	—
65-125/3.0	3	4	1.6		21.3	—	—	21.8	21.8	21.3	21.0	20.6	20.1	18.4	—	—	—
65-125/4.0	4	5.5	1.6		25.4	—	—	—	25.9	25.6	25.4	25.1	24.7	23.0	19.9	—	—
65-160/5.5	5.5	7.5	1.6		32.8	—	—	—	—	31.7	31.3	30.8	29.7	28.3	24.7	22.5	19.9
65-160/7.5	7.5	10	1.6		38.5	—	—	—	—	37.6	37.3	36.9	36.4	34.5	30.9	28.7	26.5
65-200/9.2	9.2	12.5	1.6		51.3	—	—	—	—	49.4	48.7	48.0	47.2	44.2	39.0	36.0	—
65-200/11	11	15	1.6		57.1	—	—	—	—	55.4	54.7	54.0	53.1	50.2	45.1	42.1	38.8
65-200/15	15	20	1.6		73.3	—	—	—	—	71.8	71.2	70.5	69.7	67.0	62.2	59.3	56.0

3E SERIES 80 SIZE

Pump type	kW	HP	Max working pressure (MPa)	l/min	0	400	600	900	1000	1100	1300	1500	1700	1900	2100
				m^3/h	0	24	36	54	60	66	78	90	102	114	126
80-100/1.5	1.5	2	1.0		12.5	10.9	9.8	7.3	—	—	—	—	—	—	—
80-100/2.2	2.2	3	1.0		14.8	13.8	13.0	11.1	10.2	—	—	—	—	—	—
80-160/9.2	9.2	12.5	1.6		35.3	—	33.8	32.0	31.2	30.3	28.0	25.1	21.6	17.5	12.8
80-160/11	11	15	1.6		39.9	—	38.6	36.8	36.1	35.2	33.2	30.6	27.6	23.9	19.5
80-160/15	15	20	1.6		45.5	—	44.4	42.6	41.9	41.0	39.1	36.9	34.2	31.1	27.5
80-200/18.5	18.5	25	1.6		58.8	—	57.4	54.3	53.0	51.6	48.5	45.1	41.2	36.8	31.7
80-200/22	22	30	1.6		66.6	—	64.8	62.3	61.2	60.0	57.2	53.8	49.9	45.5	40.7

3E SERIES 100 SIZE

Pump type	kW	HP	Max working pressure (MPa)	l/min	0	1300	1600	1900	2200	2500	2800	3000	3200	3400	3600
				m^3/h	0	78	96	114	132	150	168	180	192	204	216
100-160/11	11	15	1.6		29.9	26.3	25.2	24.0	22.6	20.8	18.4	16.5	14.3	—	—
100-160/15	15	20	1.6		34.7	32.6	31.6	30.4	29.0	27.4	25.3	23.6	21.6	19.1	—
100-160/18.5	18.5	25	1.6		39.1	37.4	36.7	35.6	34.3	32.6	30.5	28.8	26.9	24.8	22.5

SELECTION CHART 4 POLE

3E4 SERIES 32 SIZE

Pump type	kW	HP	Max. working pressure (MPa)	l/min	0	50	100	150	200
				m^3/h	0	3	6	9	12
32-160/0.37R	0.37	0.5	1.6		7.3	6.8	6.0	4.7	—
32-160/0.37	0.37	0.5	1.6		9.3	8.9	8.1	6.7	5.0
32-200/0.55	0.55	0.75	1.6		13.1	12.5	11.1	9.1	6.7

3E4 SERIES 40 SIZE

Pump type	kW	HP	Max. working pressure (MPa)	l/min	0	50	100	150	175	200	250
				m^3/h	0	3	6	9	10.5	12	15
40-160/0.37R	0.37	0.5	1.6		7.3	6.8	6.0	4.8	4.0	3.0	—
40-160/0.37	0.37	0.5	1.6		9.3	9.0	8.2	6.9	6.1	5.3	3.3
40-200/0.55	0.55	0.75	1.6		12.5	—	10.5	8.9	8.0	6.9	—
40-200/0.75	0.75	1	1.6		16.7	—	14.9	13.2	12.3	—	—

3E4 SERIES 50 SIZE

Pump type	kW	HP	Max. working pressure (MPa)	l/min	0	100	150	200	250	300	350	400	450
				m^3/h	0	6	9	12	15	18	21	24	27
50-125/0.37	0.37	0.5	1.6		6.1	6.0	5.6	5.1	4.5	3.8	3.0	2.1	—
50-160/0.55	0.55	0.75	1.6		9.5	8.9	8.5	7.9	7.3	6.5	5.7	4.8	—
50-200/0.75	0.75	1	1.6		10.9	10.5	10.1	9.6	9.1	8.4	7.6	6.6	5.3
50-200/1.1	1.1	1.5	1.6		13.5	12.9	12.5	12.1	11.5	10.8	10.0	9.1	8.4
50-200/1.5	1.5	2	1.6		16.9	16.1	15.7	15.3	14.7	14.0	13.1	12.0	10.7

3E4 SERIES 65 SIZE

Pump type	kW	HP	Max. working pressure (MPa)	l/min	0	200	250	300	350	400	500	600	700
				m^3/h	0	12	15	18	21	24	30	36	42
65-125/0.55	0.55	0.75	1.6		6.1	6.1	6.0	5.8	5.5	5.1	4.2	3.3	—
65-160/0.75	0.75	1	1.6		7.7	7.5	7.2	7.0	6.6	6.2	5.2	4.0	2.6
65-160/1.1	1.1	1.5	1.6		9.2	9.0	8.7	8.4	8.0	7.6	6.6	5.4	3.9
65-200/1.5	1.5	2	1.6		13.6	13.0	12.6	12.1	11.6	10.9	9.5	7.7	5.7
65-200/2.2	2.2	3	1.6		17.9	17.1	16.8	16.3	15.8	15.2	13.6	11.6	9.2

3E4 SERIES 80 SIZE

Pump type	kW	HP	Max. working pressure (MPa)	l/min	0	350	500	600	800	900	1000	1100	1200
				m^3/h	0	21	30	36	48	54	60	66	72
80-160/1.5	1.5	2	1.6		9.8	9.3	8.6	8.1	6.7	5.8	—	—	—
80-200/2.2	2.2	3	1.6		14.7	14.0	13.1	12.4	10.3	9.1	7.8	—	—
80-200/3.0	3	4	1.6		16.7	15.8	14.9	14.2	12.4	11.2	10	8.6	7.1

3E4 SERIES 100 SIZE

Pump type	kW	HP	Max. working pressure (MPa)	l/min	0	600	800	1000	1200	1400	1600	1800
				m^3/h	0	36	48	60	72	84	96	108
100-160/1.5	1.5	2	1.6		7.8	6.9	6.7	6.3	5.6	4.8	—	—
100-160/2.2	2.2	3	1.6		9.8	9.1	8.8	8.4	7.9	7.1	6.0	4.8

TYPE KEY

3E 4 32 - 125 / 0.75 R – Q1AVGG

Optional Mechanical Seal
NA : Q1AEGG (Standard)
Q4Q1EGG (Optional)
Q4Q1VGG (Optional)
Q1AVGG (Optional)

Reduced Impeller
NA : Full diameter Impeller
R : Reduced Impeller

Motor Power (kW)
0.37/0.55/0.75/1.1/1.5/2.2/3/4/5.5/
7.5/9.2/11/15/18.5/22

Nominal impeller diameter in millimeters
100/125/160/200

Suction/Discharge nozzle, nominal size in millimeters
32/40/50/65/80/100

Number of poles
NA=2 poles
4=4 poles

3E Series
3E : Extended shaft model
3ES : Stub shaft model

PERFORMANCE CURVE SPECIFICATIONS

The specifications below qualify the curves shown on the following pages.

Tolerances according to ISO 9906:2012 - Grade 3B
The curves refer to effective speed of asynchronous motors at 50 Hz, 2 poles.
Measurements were carried out with clean water at 20°C of temperature and with a kinematic viscosity of ν = 1 mm^2/s (1 cSt)

The NPSH curve is an average curve obtained in the same conditions of performance curves.
The continuous curves indicate the recommended working range. The dotted curve is only a guide.
In order to avoid the risk of over-heating, the pumps should not be used at a flow rate below 10% of best efficiency point.

Symbols explanation:

Q	=	volume flow rate
H	=	total head
P_2	=	pump power input (shaft power)
η	=	pump efficiency
NPSH	=	net positive suction head required by the pump
MEI	=	minimum efficiency index

MEI INDEX SPECIFICATIONS

The minimum efficiency index (MEI) is a measure of the quality of a pump size in respect to its mean efficiency. The minimum efficiency index is based on the hydraulic efficiency and on the head at the best efficiency point.

The efficiency of a pump with trimmed impeller is usually lower than that of a pump with the full impeller diameter. The trimming of the impeller will adapt the pump to a fixed duty point, leading to a reduced energy consumption. The minimum efficiency index (MEI) is based on the full impeller diameter.

The operation of these water pumps with variable duty points may be more efficient and economical when controlled, for example, by the use of a variable speed drive that matches the pump duty to the system.

MEI = 0.4 for ESCCi 2900rpm

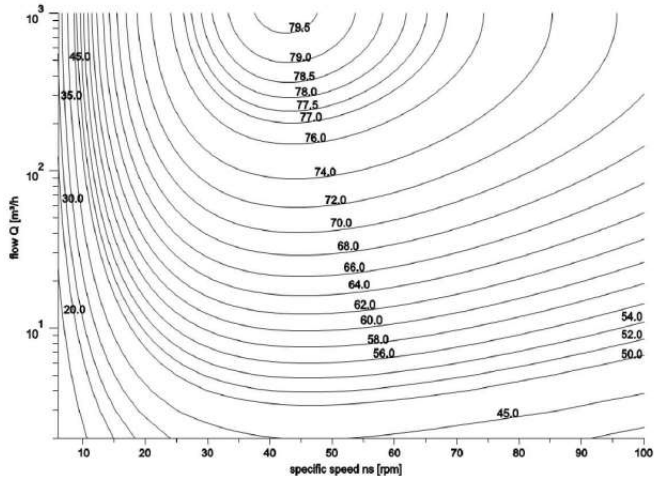

MEI=0.7 for ESCCi 2900 rpm

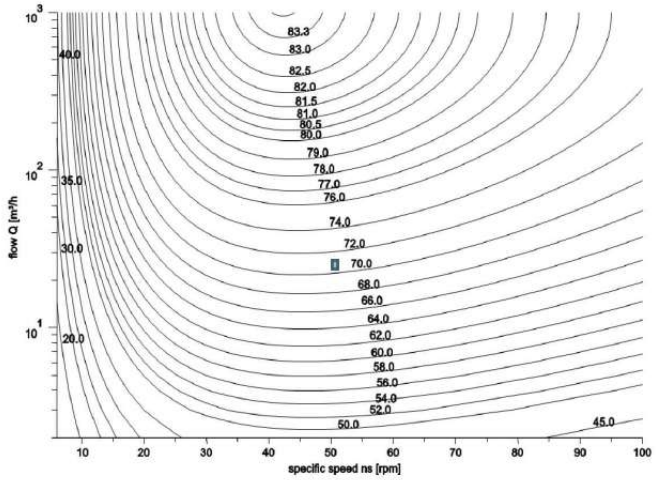

MEI = 0.4 for ESCCi 1450 rpm

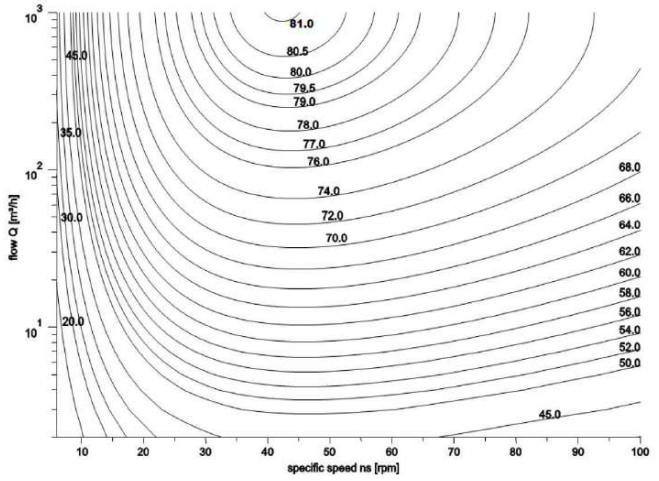

MEI = 0.7 for ESCCi 1450rpm

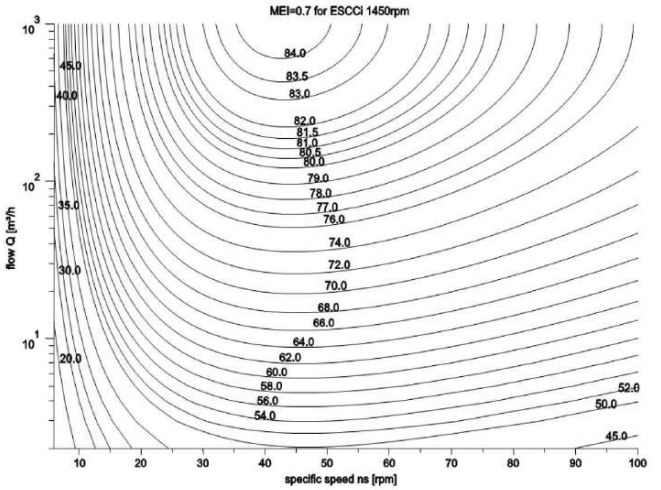

PERFORMANCE CURVE

50Hz

Rev.C

3E(S) 32-125 **2 POLE**

32-125/0.37 (0.37kW) - impeller diameter = 114 mm
32-125/0.55 (0.55kW) - impeller diameter = 118 mm
32-125/0.75 (0.75kW) - impeller diameter = 146 mm

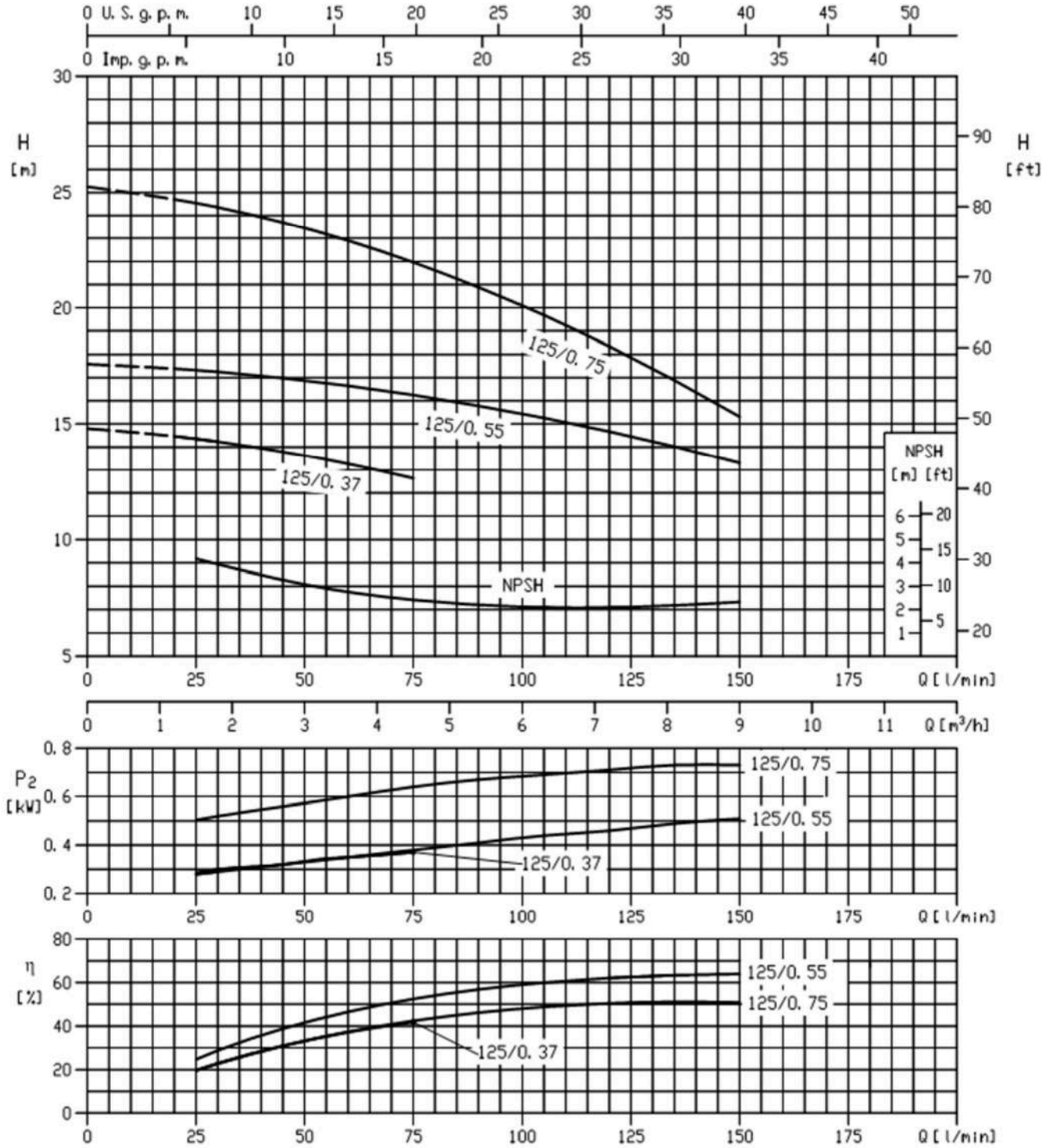

Rotation speed ≈ 2900 min^{-1}
Test standard : ISO 9906 Annex A

PERFORMANCE CURVE

50Hz

Rev.C

3E(S) 40-160 **2 POLE**

40-160/1.1 (1.1kW) - impeller diameter = 133 mm
40-160/1.5 (1.5kW) - impeller diameter = 151 mm
40-160/2.2 (2.2kW) - impeller diameter = 166 mm

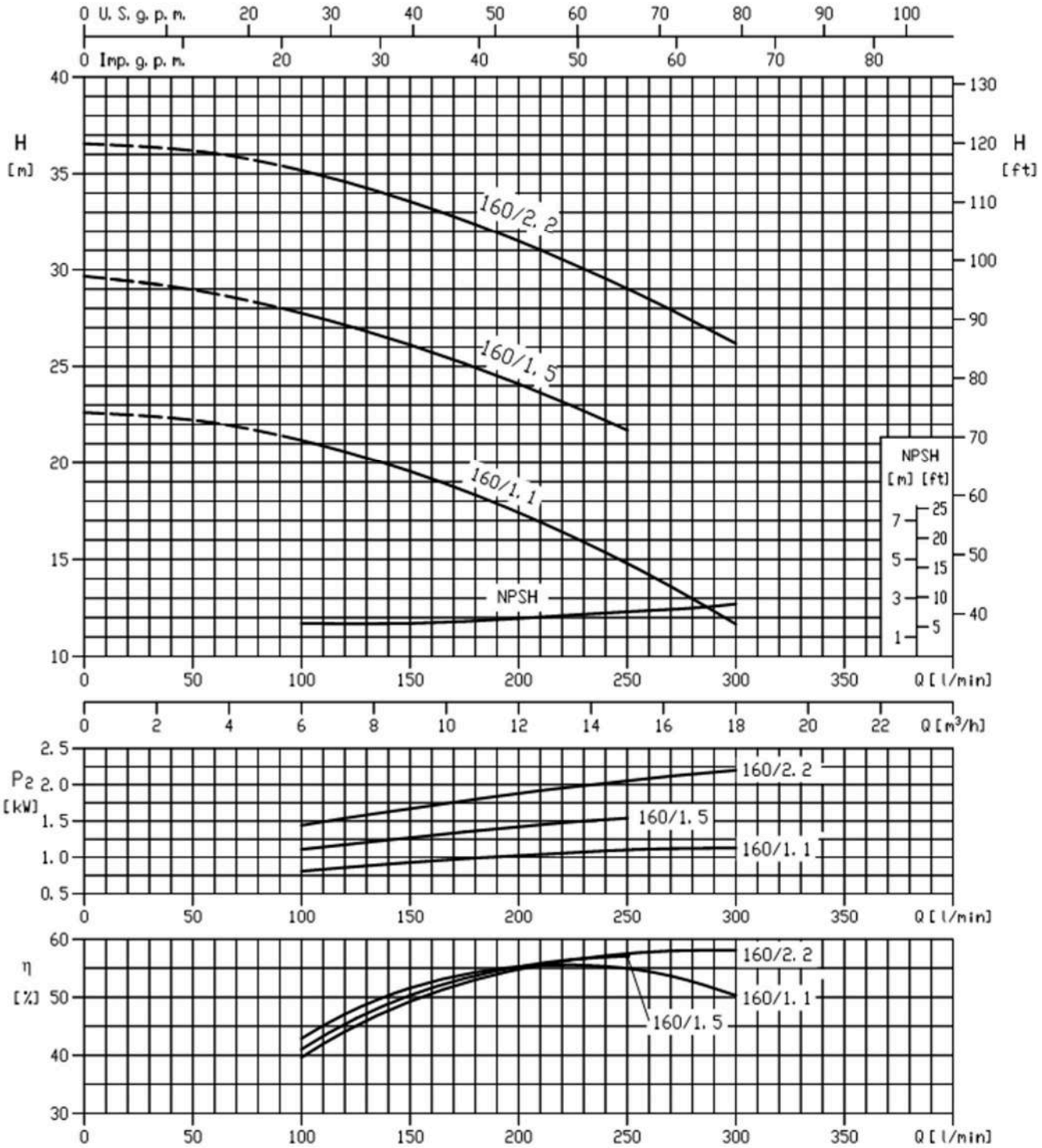

Rotation speed ≈ 2900 min^{-1}
Test standard : ISO 9906 Annex A

PERFORMANCE CURVE

50Hz

Rev.C

3E(S) 40-200 **2 POLE**

40-200/3.0 (3.0 kW) - impeller diameter = 186 mm
40-200/4.0 (4.0 kW) - impeller diameter = 200 mm
40-200/7.5 (7.5 kW) - impeller diameter = 224 mm

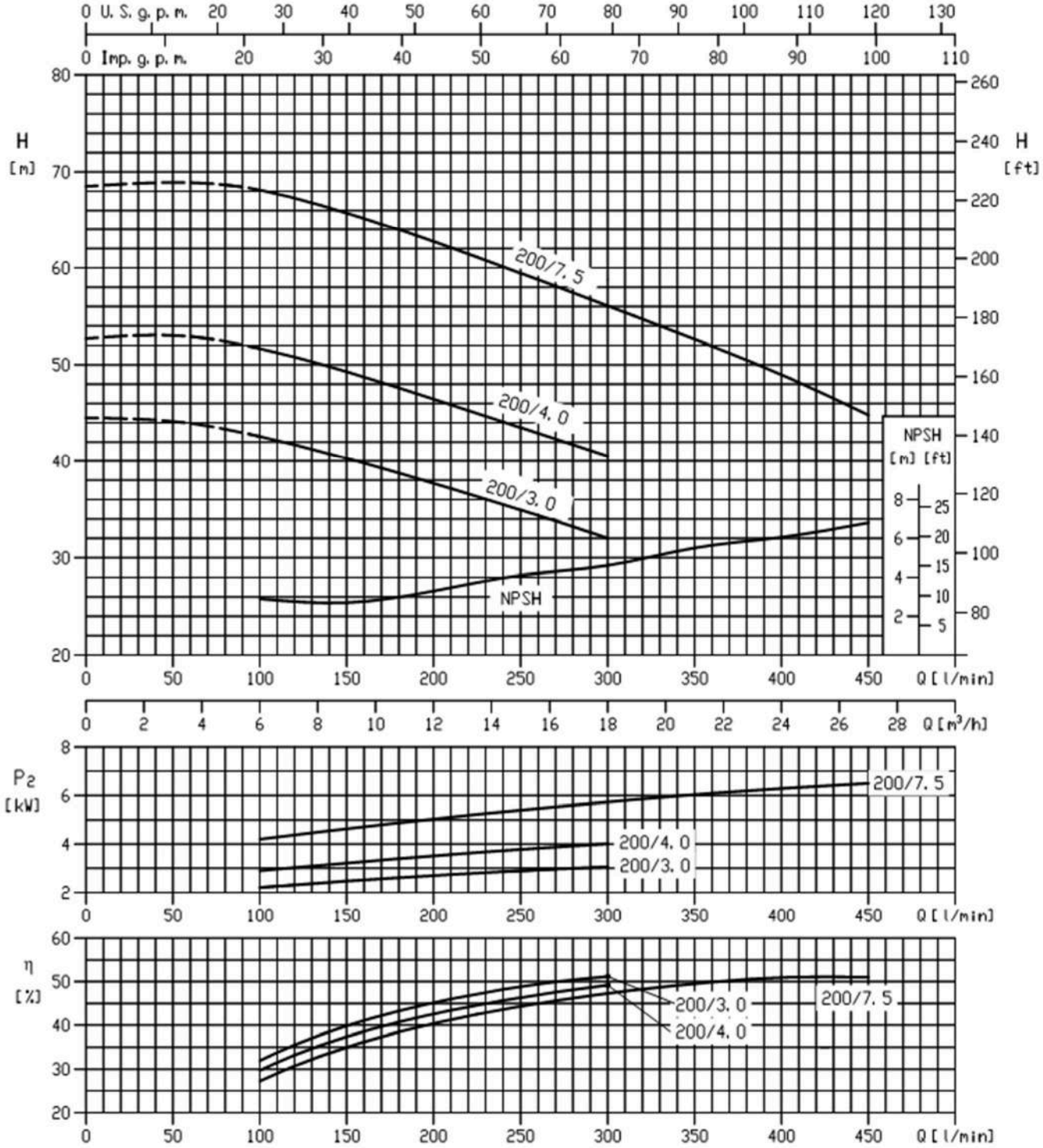

Rotation speed ≈ 2900 min^{-1}
Test standard : ISO 9906 Annex A

PERFORMANCE CURVE

50Hz

Rev.C

3E(S) 50-100 **2 POLE**

50-100/0.37 (0.37kW) - impeller diameter = 86 mm
50-100/0.55 (0.55kW) - impeller diameter = 101 mm
50-100/0.75 (0.75kW) - impeller diameter = 114 mm

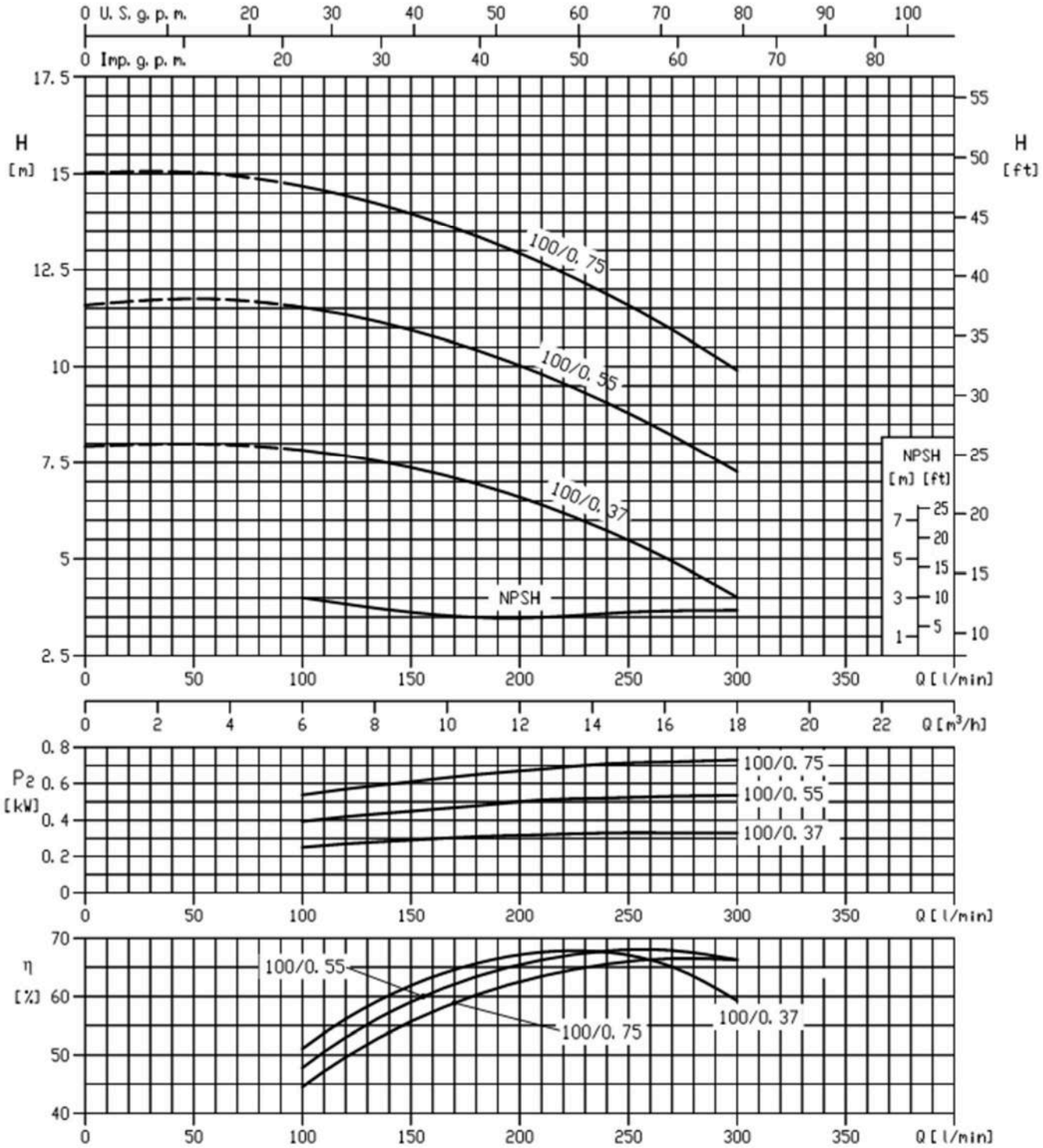

Rotation speed ≈ 2900 min^{-1}
Test standard : ISO 9906 Annex A

PERFORMANCE CURVE

50Hz

Rev.C

3E(S) 50-125 **2 POLE**

50-125/1.5 (1.5 kW) - impeller diameter = 125 mm
50-125/2.2 (2.2 kW) - impeller diameter = 140 mm

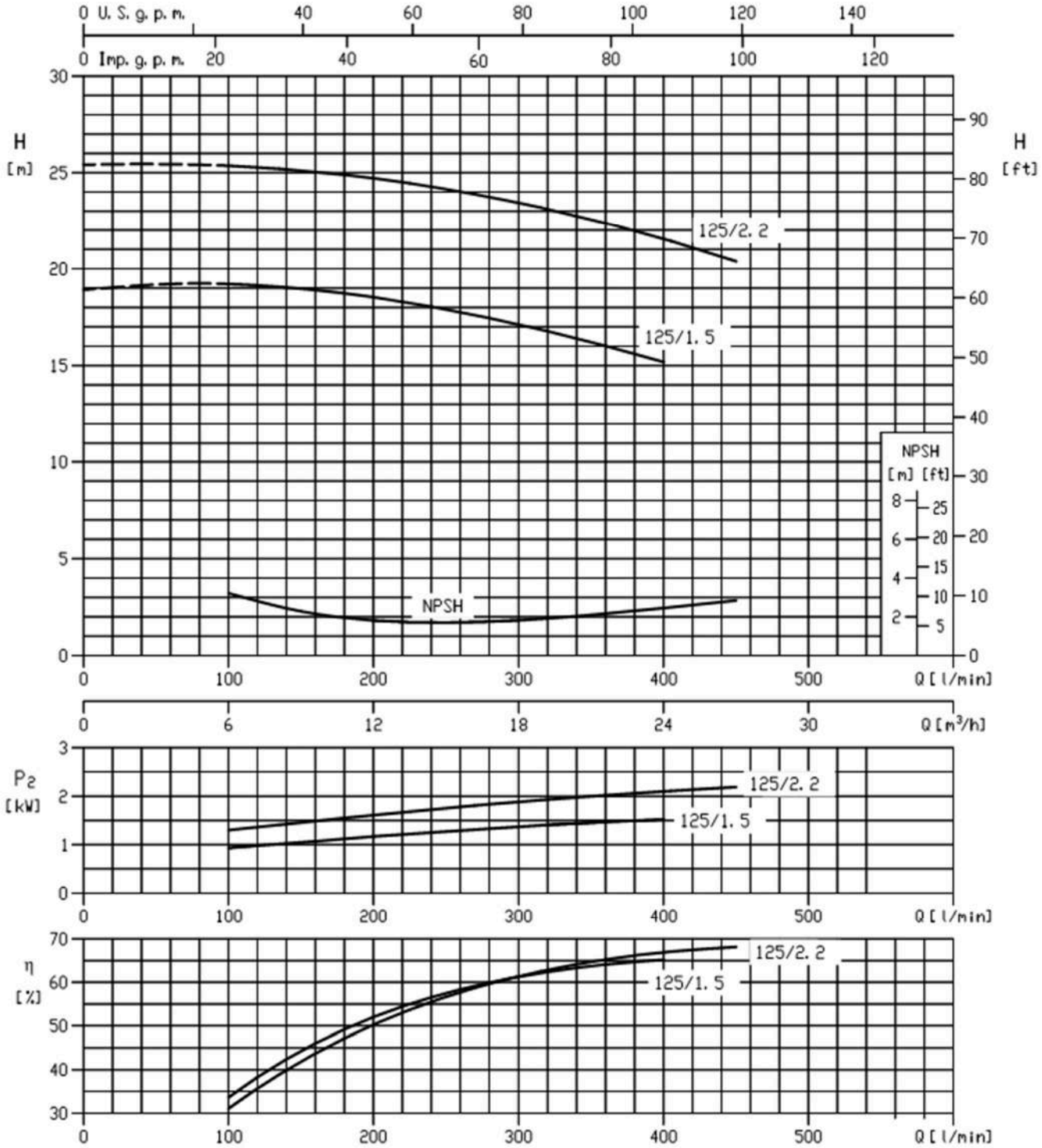

Rotation speed ≈ 2900 min^{-1}
Test standard : ISO 9906 Annex A

PERFORMANCE CURVE

50Hz

Rev.C

3E(S) 50-160 **2 POLE**

50-160/3.0 (3.0 kW) - impeller diameter = 151 mm
50-160/4.0 (4.0 kW) - impeller diameter = 166 mm

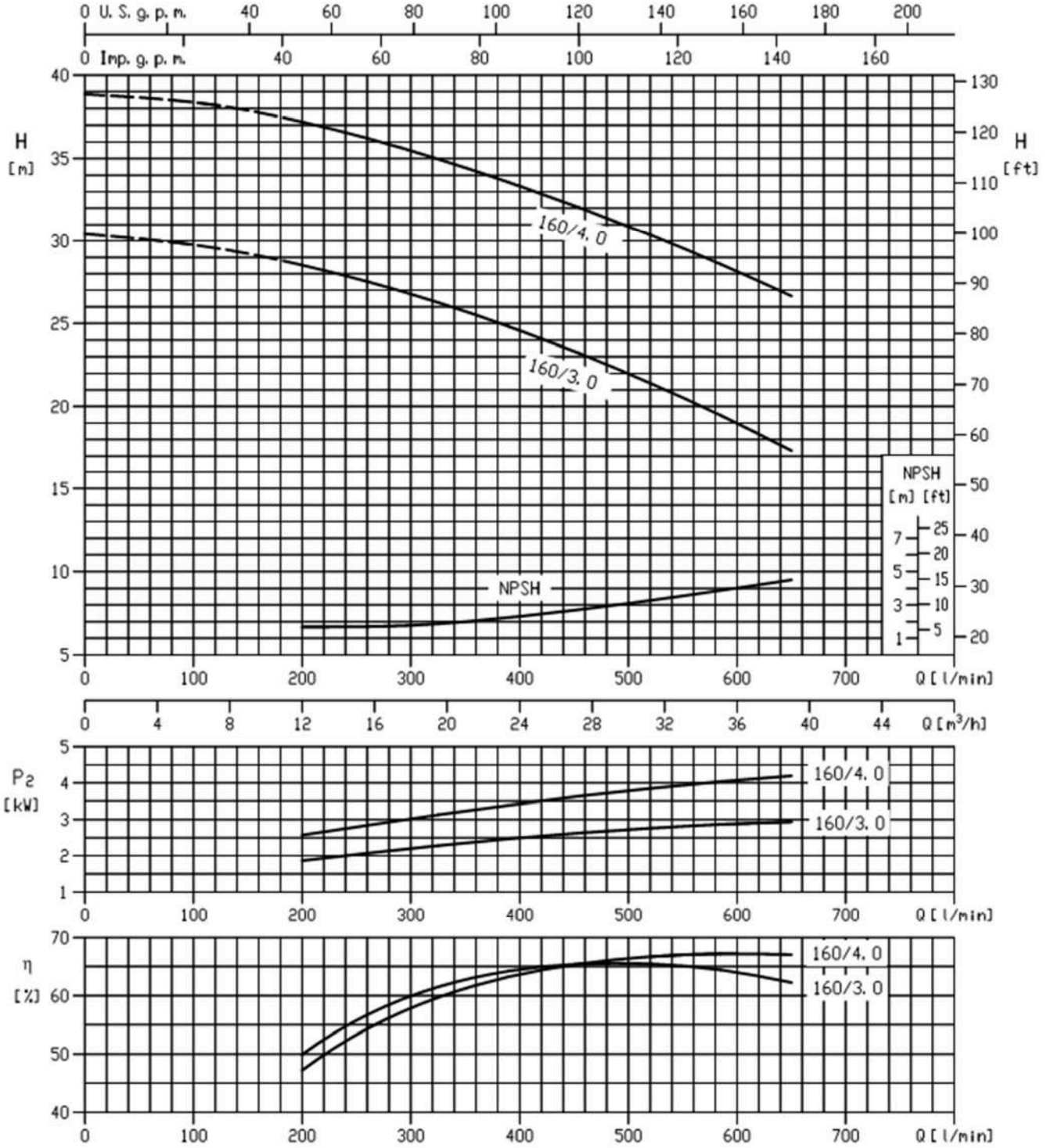

Rotation speed ≈ 2900 min^{-1}
Test standard : ISO 9906 Annex A

PERFORMANCE CURVE

50Hz

Rev.C

3E(S) 50-200 **2 POLE**

50-200/5.5 (5.5 kW) - impeller diameter = 183 mm
50-200/7.5 (7.5 kW) - impeller diameter = 200 mm
50-200/11 (11 kW) - impeller diameter = 224 mm

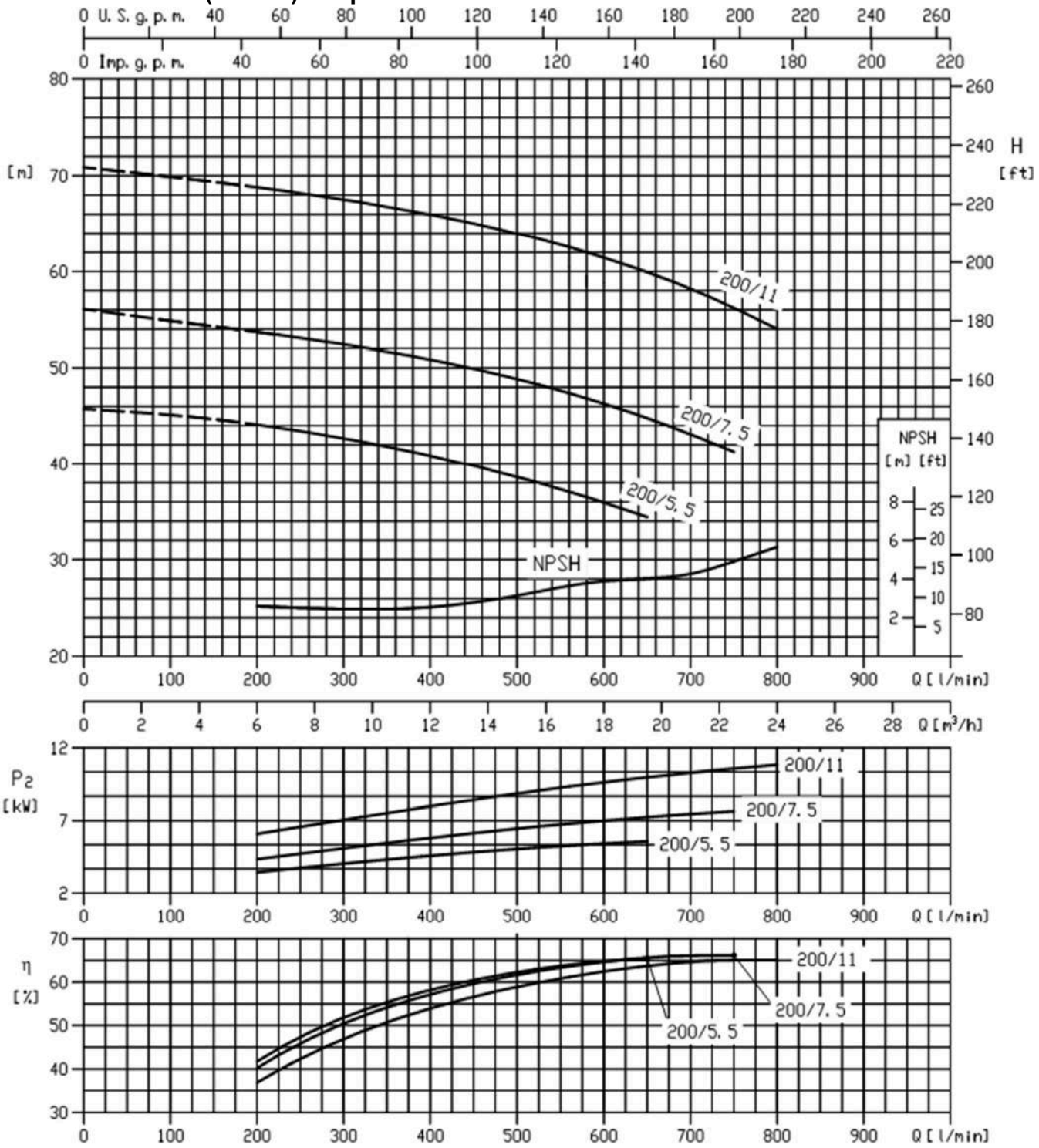

Rotation speed ≈ 2900 min^{-1}
Test standard : ISO 9906 Annex A

PERFORMANCE CURVE

50Hz

Rev.C

3E(S) 65-100 **2 POLE**

65-100/0.55 (0.55 kW) - impeller diameter = 88 mm
65-100/0.75 (0.75 kW) - impeller diameter = 94 mm
65-100/1.1 (1.1 kW) - impeller diameter = 104 mm
65-100/1.5 (1.5 kW) - impeller diameter = 114 mm

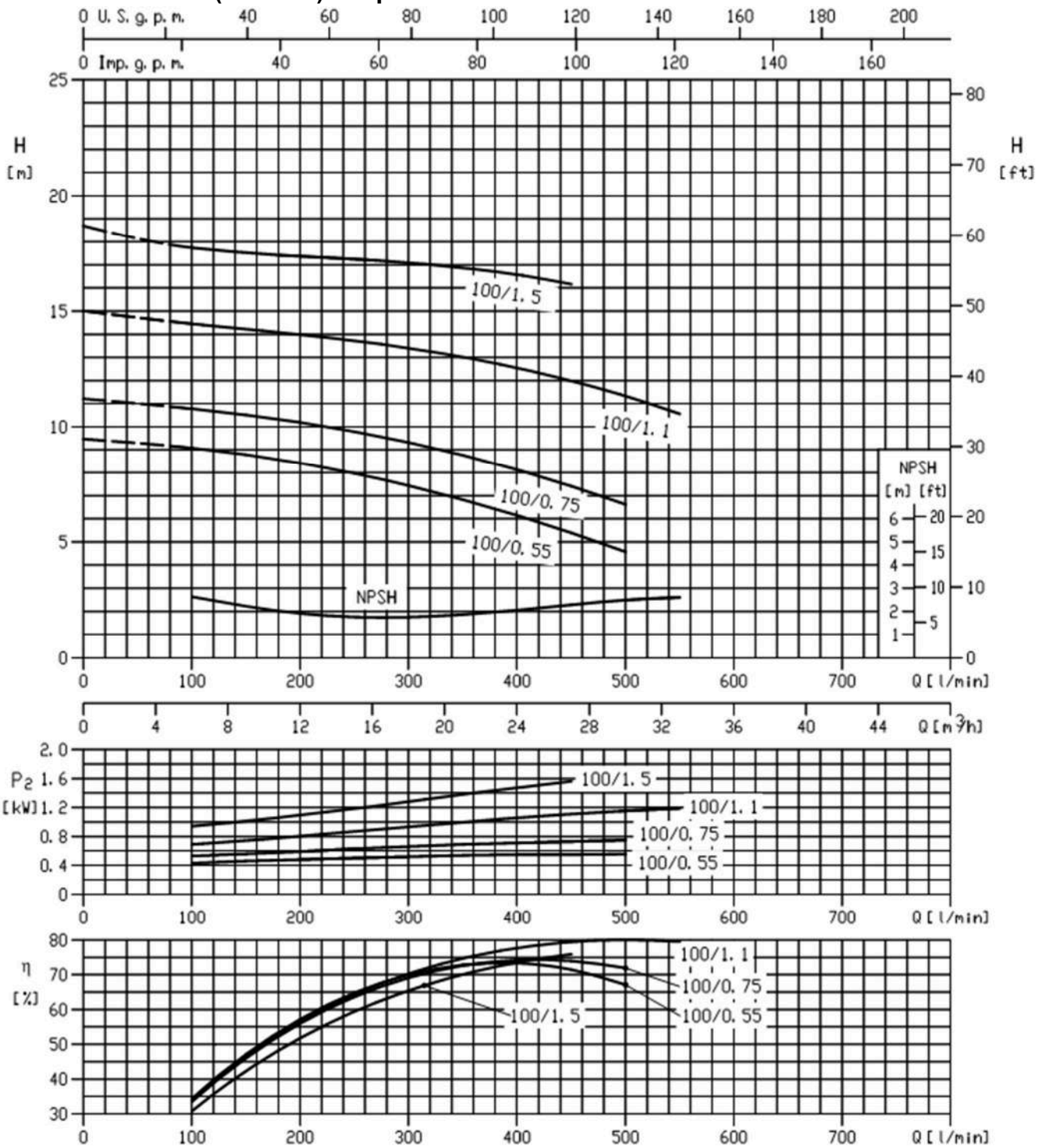

Rotation speed ≈ 2900 min^{-1}
Test standard : ISO 9906 Annex A

PERFORMANCE CURVE

50Hz

Rev.C

3E(S) 65-125 **2 POLE**

65-125/2.2 (2.2 kW) - impeller diameter = 126 mm
65-125/3.0 (3.0 kW) - impeller diameter = 131 mm
65-125/4.0 (4.0 kW) - impeller diameter = 140 mm

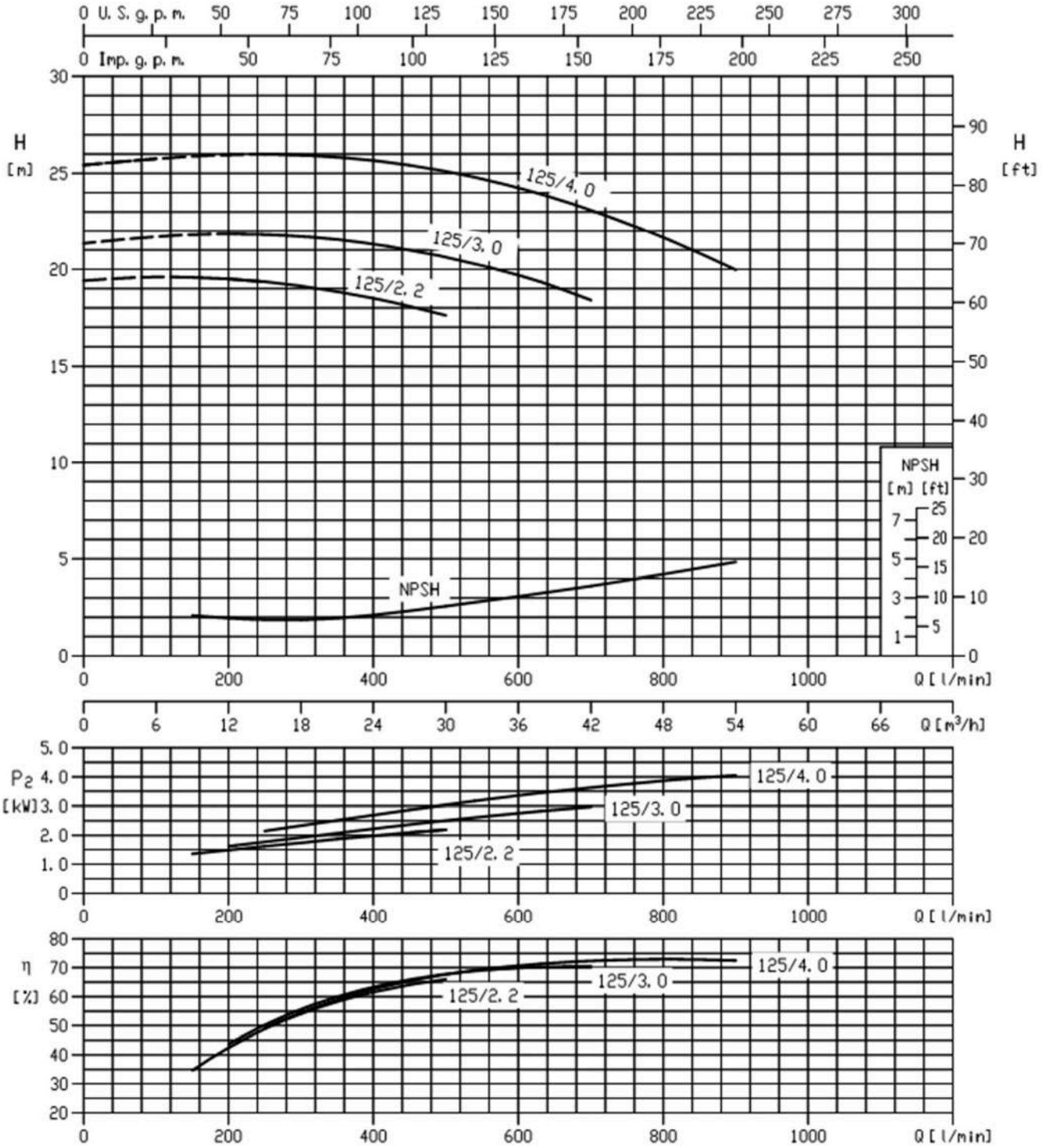

Rotation speed ≈ 2900 min^{-1}
Test standard : ISO 9906 Annex A

PERFORMANCE CURVE

50Hz

Rev.C

3E(S) 65-160 **2 POLE**

65-160/5.5 (5.5 kW) - impeller diameter = 154 mm
65-125/7.5 (7.5 kW) - impeller diameter = 166 mm

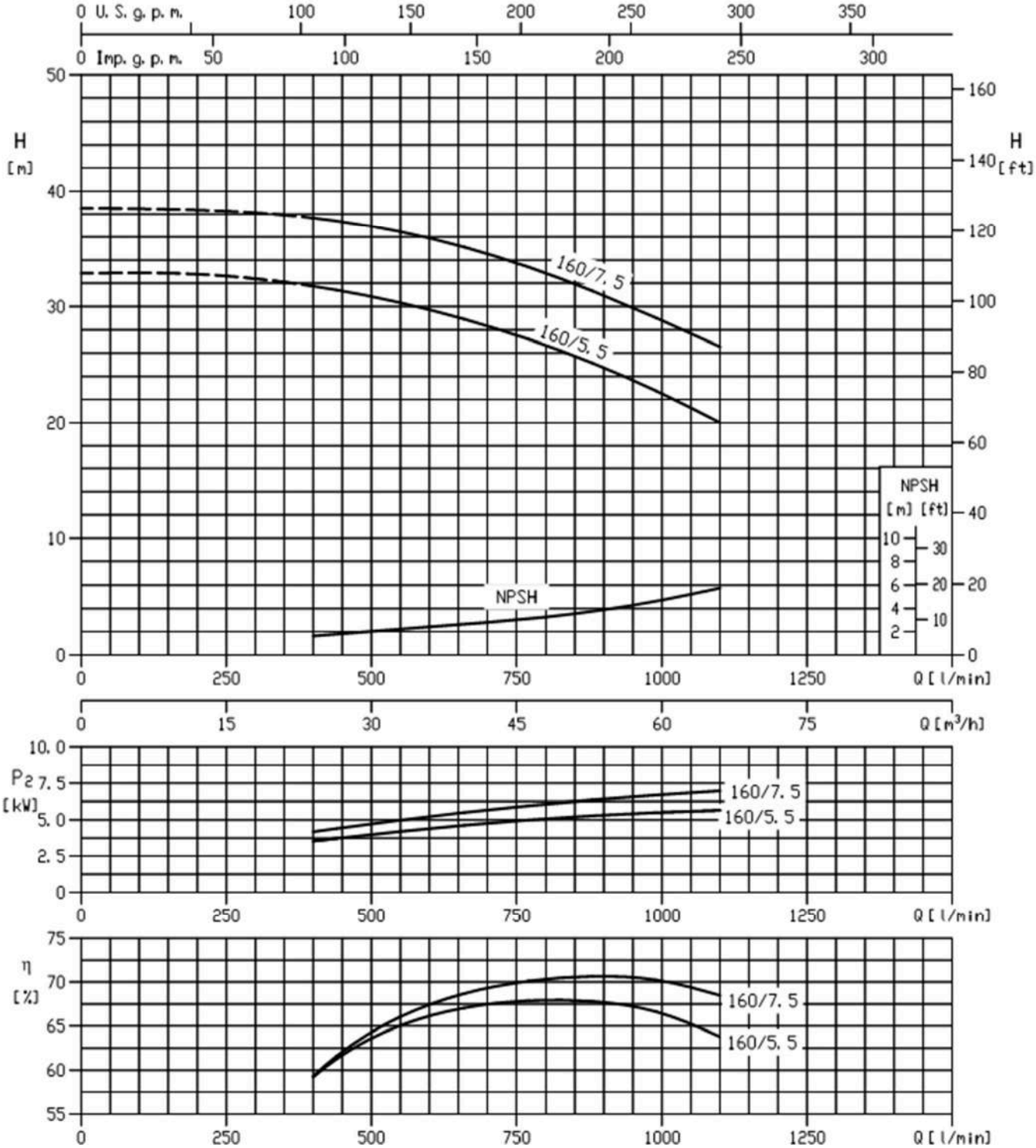

Rotation speed ≈ 2900 min^{-1}

Test standard : ISO 9906 Annex A

PERFORMANCE CURVE

50Hz

Rev.C

3E(S) 65-200 **2 POLE**

65-200/9.2 (9.2 kW) - impeller diameter = 191 mm
65-200/11 (11 kW) - impeller diameter = 200 mm
65-200/15 (15 kW) - impeller diameter = 224 mm

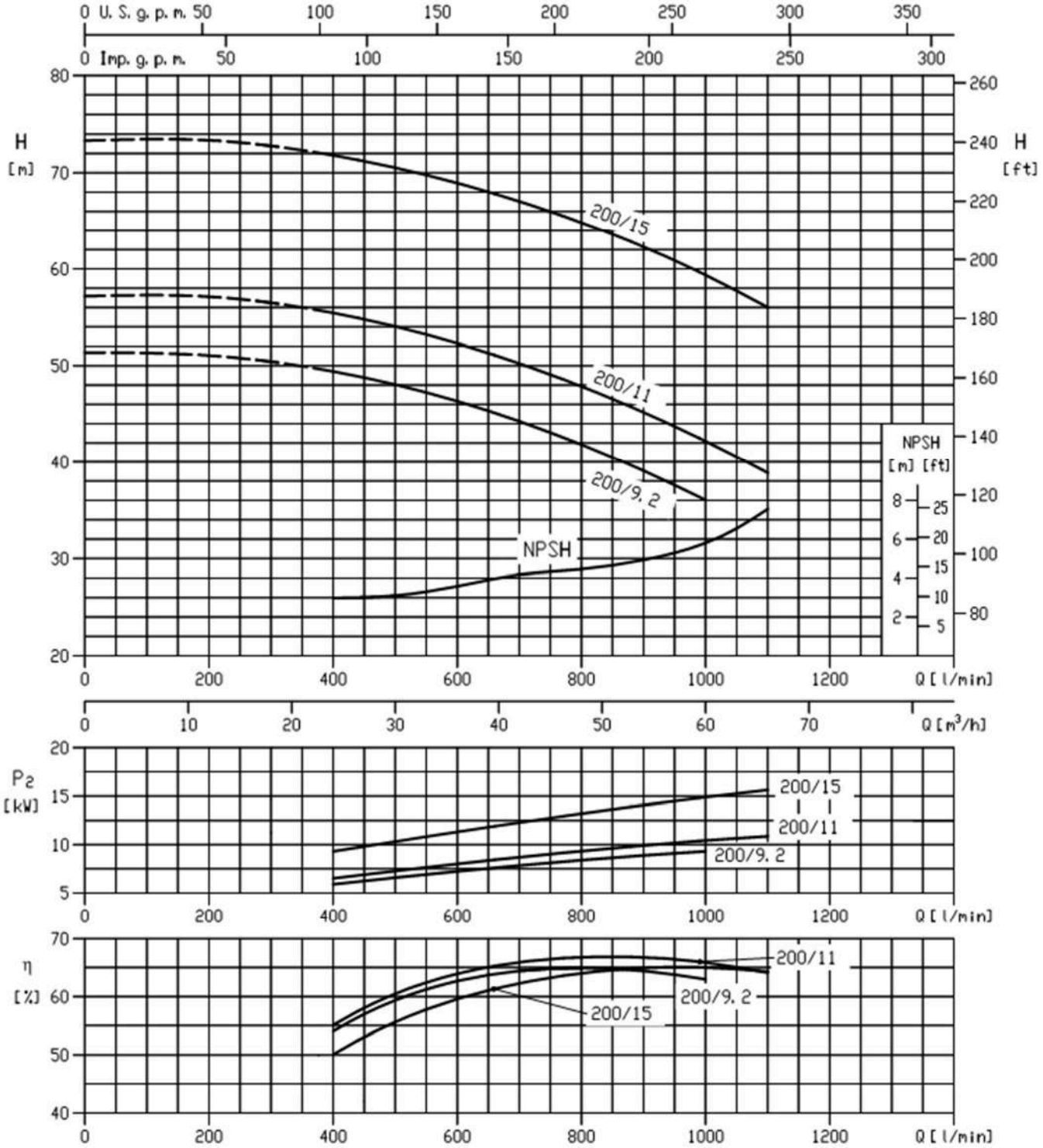

Rotation speed ≈ 2900 min^{-1}
Test standard : ISO 9906 Annex A

PERFORMANCE CURVE

50Hz

Rev.C

3E(S) 80-100 **2 POLE**

80-100/1.5 (1.5 kW) - impeller diameter = 103 mm
80-100/2.2 (2.2 kW) - impeller diameter = 110 mm

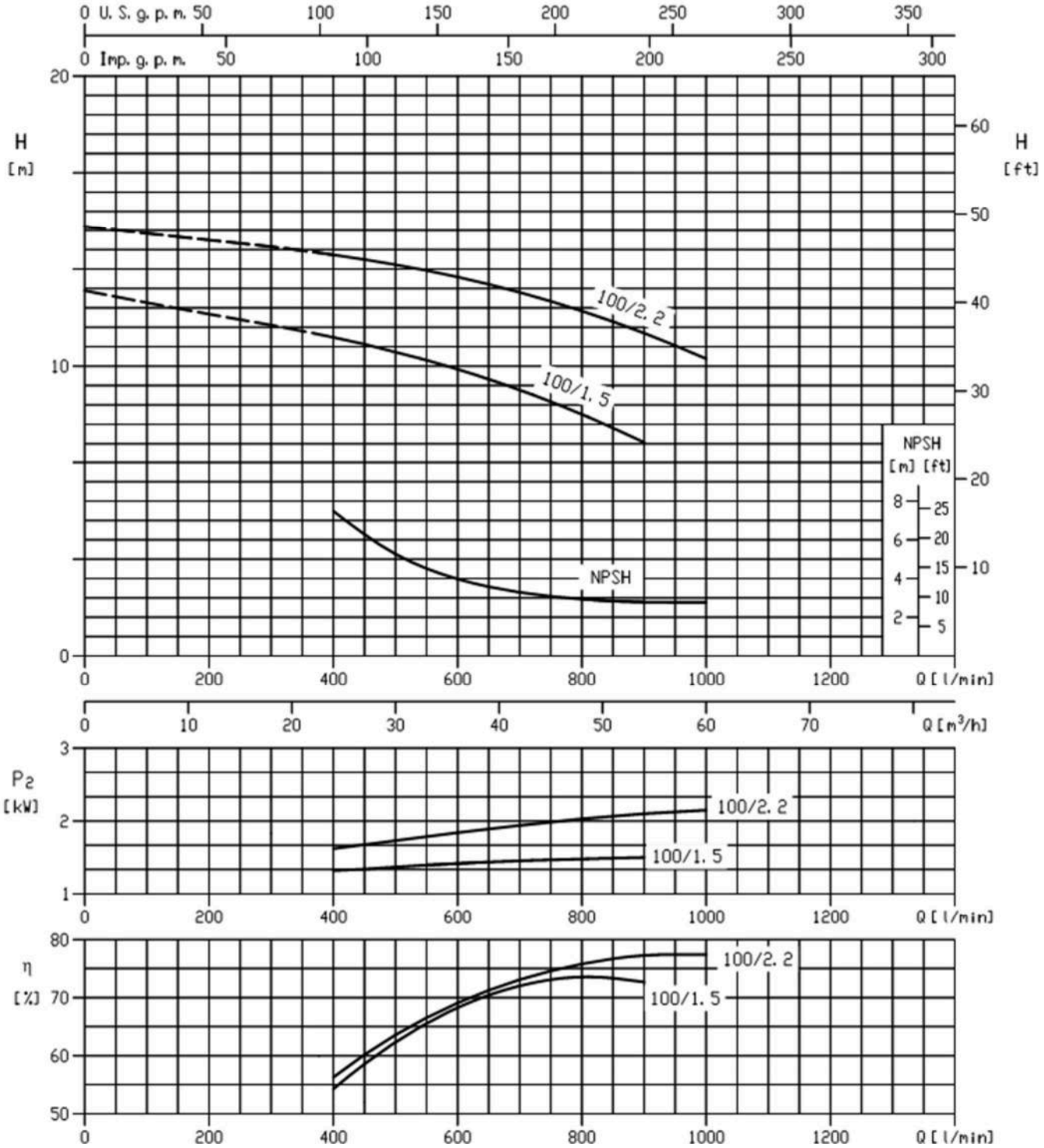

Rotation speed ≈ 2900 min^{-1}
Test standard : ISO 9906 Annex A

PERFORMANCE CURVE

50Hz

Rev.C

3E(S) 80-160 **2 POLE**

80-160/9.2 (9.2 kW) - impeller diameter = 160 mm
80-160/11 (11 kW) - impeller diameter = 168 mm
80-160/15 (15 kW) - impeller diameter = 178 mm

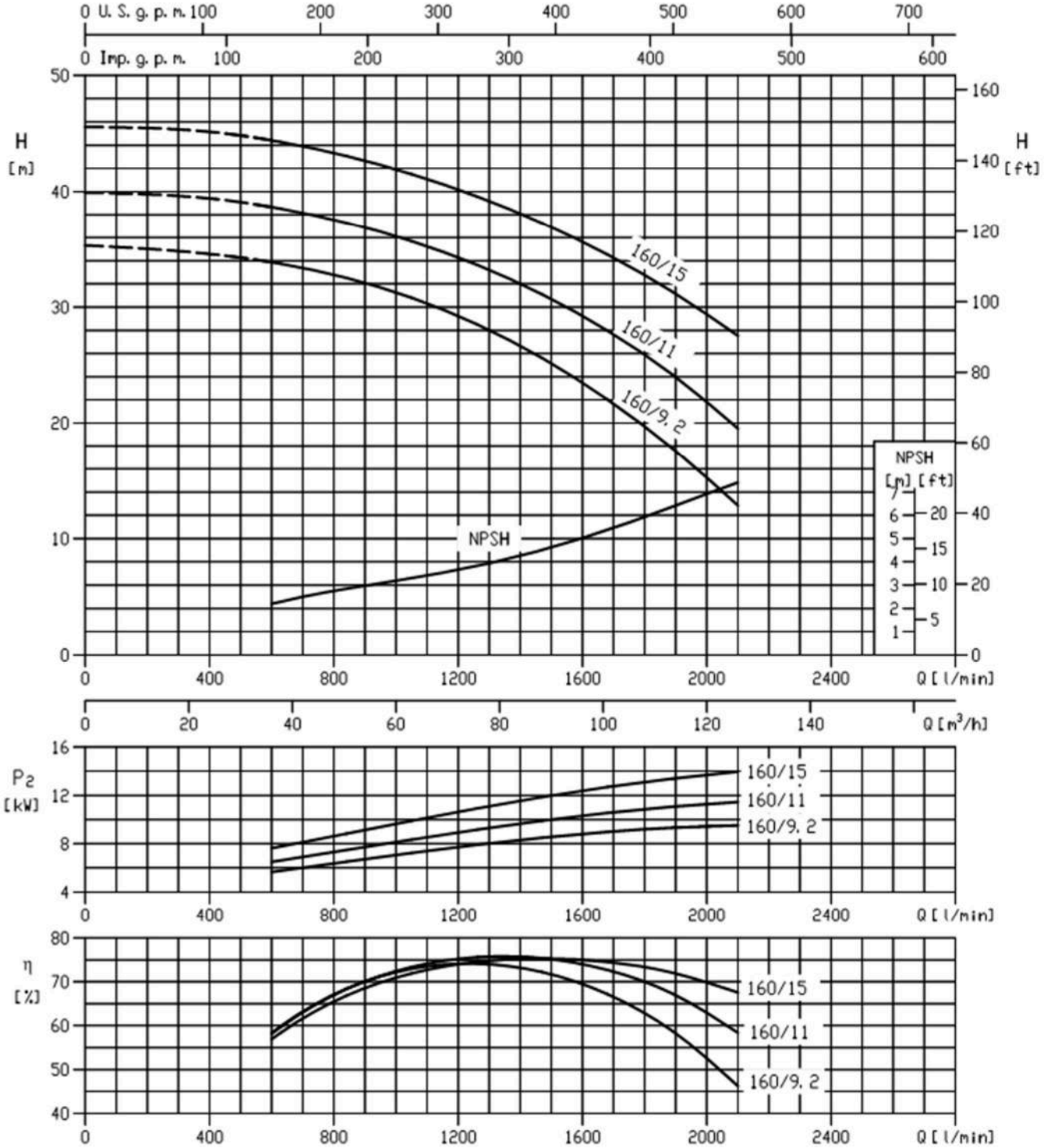

Rotation speed ≈ 2900 min^{-1}
Test standard : ISO 9906 Annex A

PERFORMANCE CURVE

50Hz

Rev.C

3E(S) 80-200 **2 POLE**

80-200/18.5 (18.5 kW) - impeller diameter = 201 mm
80-200/22 (22 kW) - impeller diameter = 212 mm

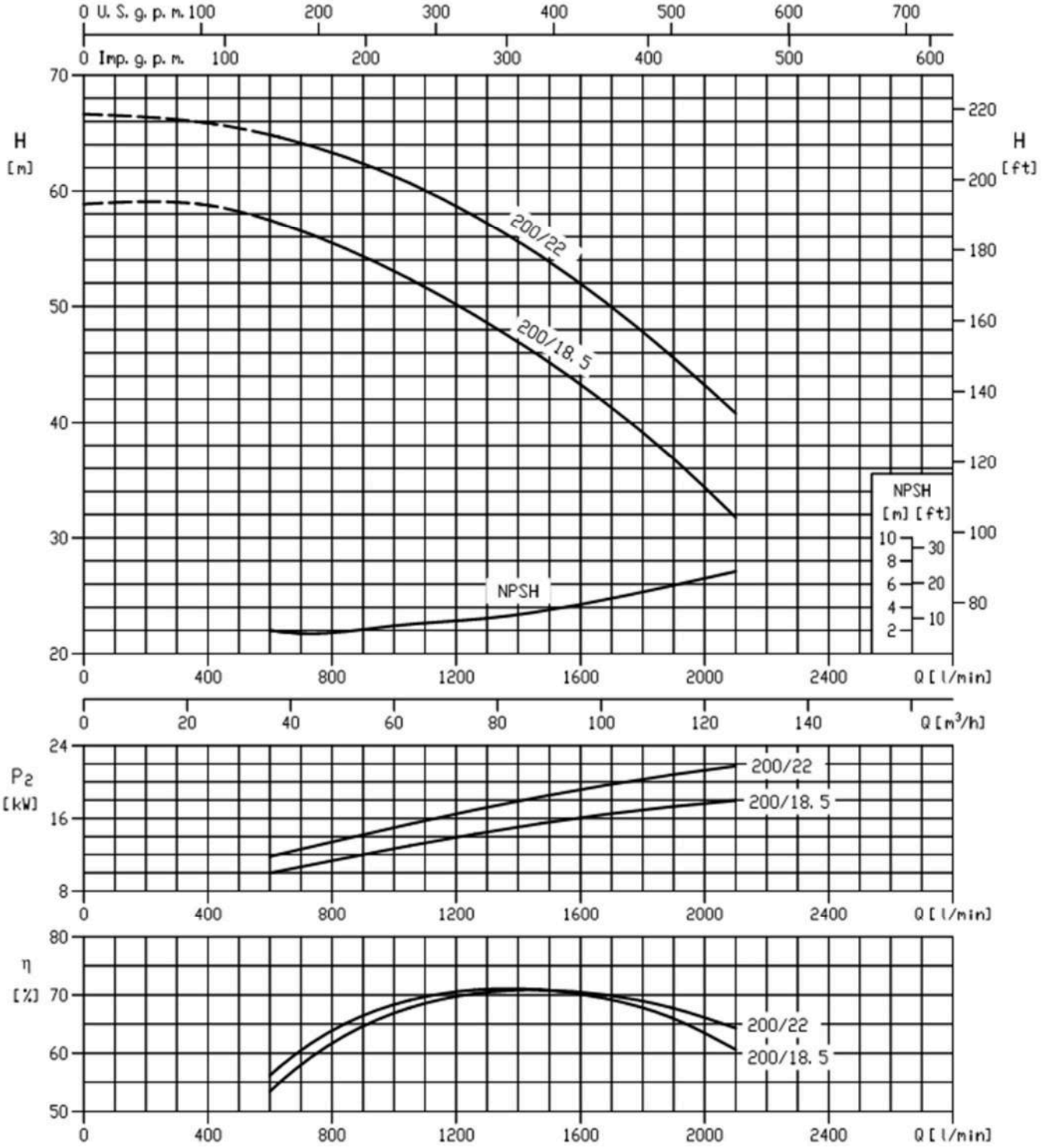

Rotation speed ≈ 2900 min^{-1}
Test standard : ISO 9906 Annex A

PERFORMANCE CURVE

50Hz

Rev.C

3E(S) 100-160 **2 POLE**

100-160/11 (11 kW) - impeller diameter = 154 mm
100-160/15 (15 kW) - impeller diameter = 165 mm
100-160/18.5 (18.5 kW) - impeller diameter = 174 mm

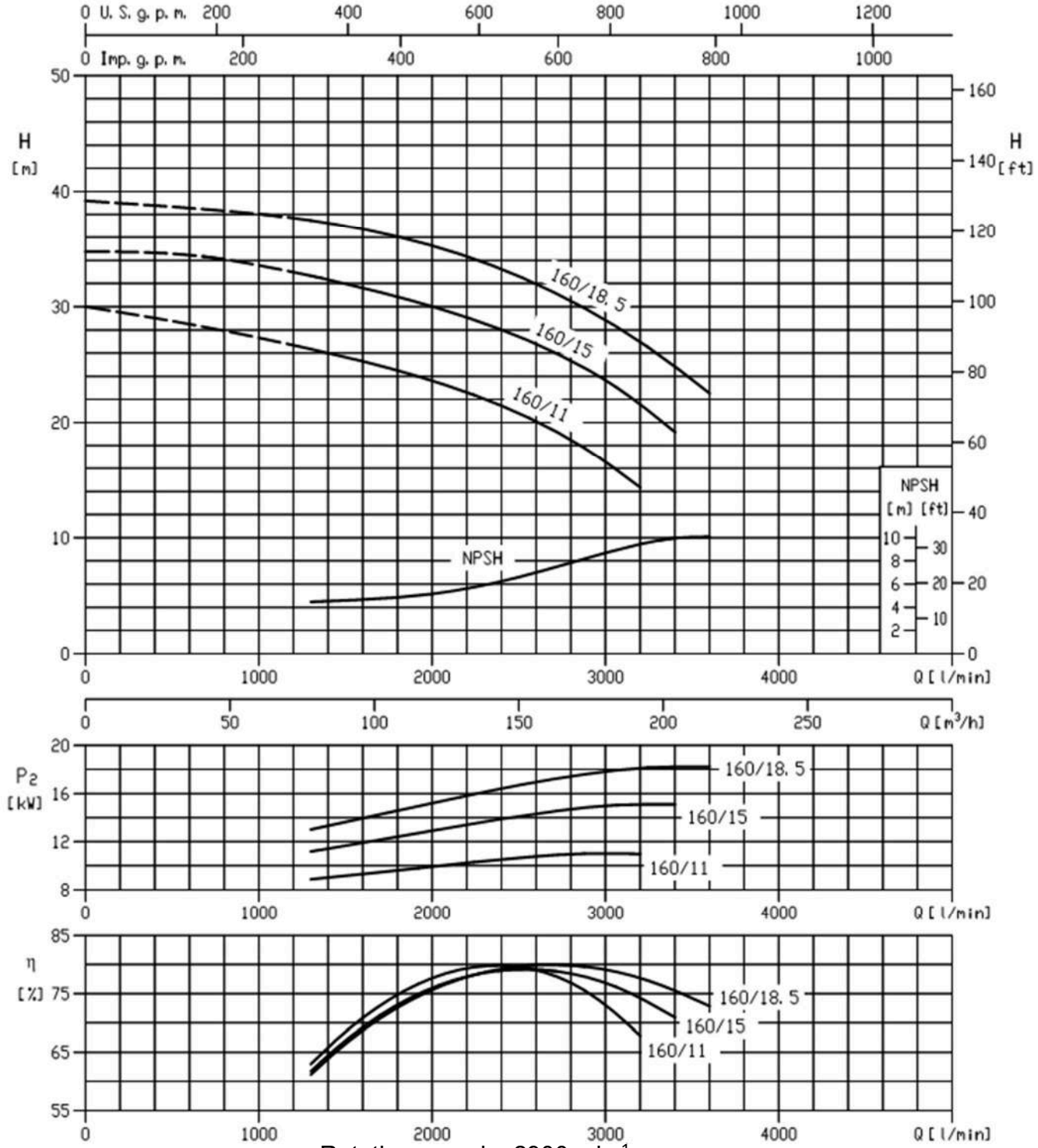

Rotation speed ≈ 2900 min^{-1}
Test standard : ISO 9906 Annex A

PERFORMANCE CURVE

50Hz

Rev.C

3E(S) 32-160 **4 POLE**

32-160/0.37R (0.37 kW) - impeller diameter = 151 mm
32-160/0.37 (0.37 kW) - impeller diameter = 166 mm

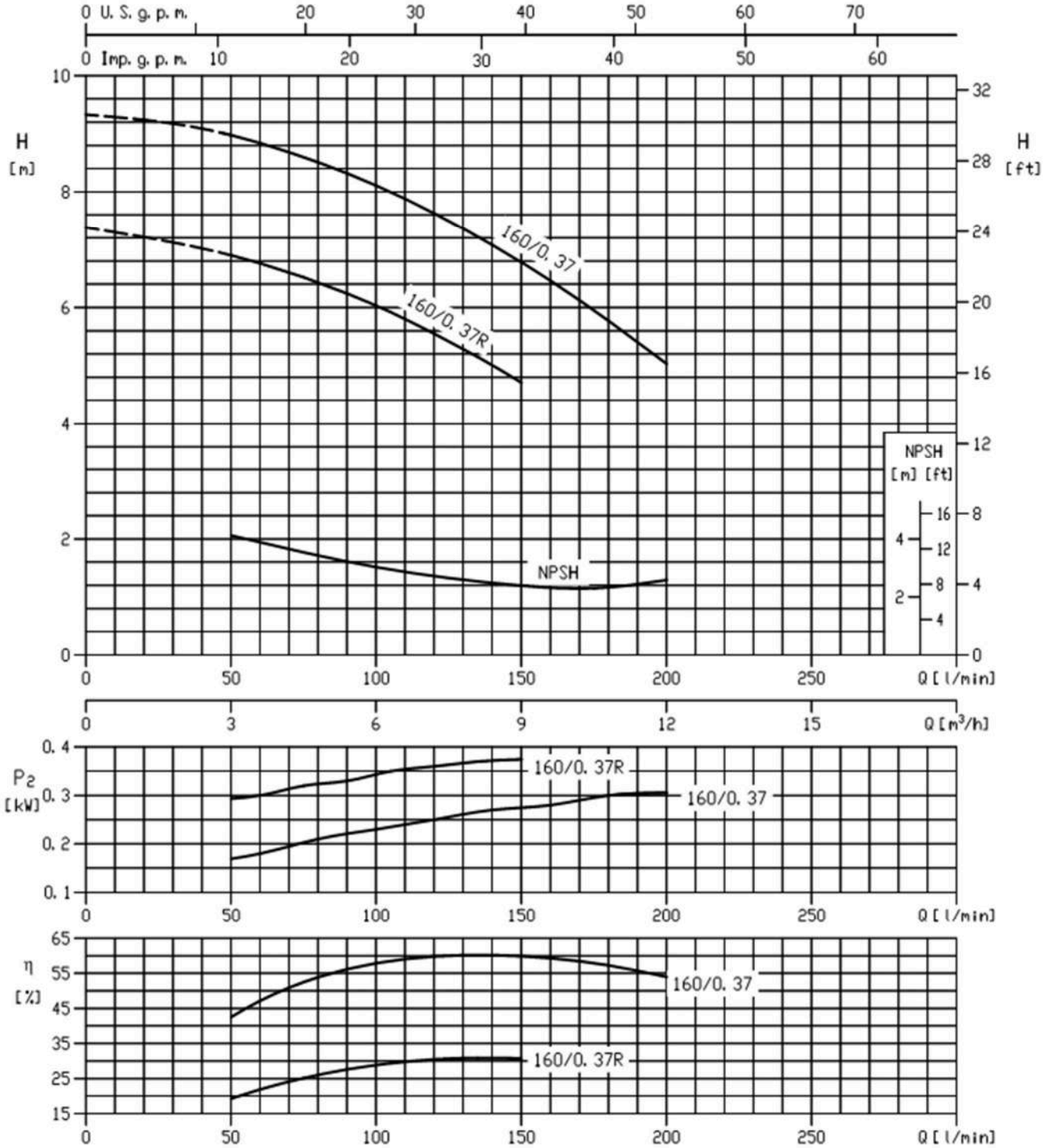

Rotation speed ≈ 1450 min^{-1}
Test standard : ISO 9906 Annex A

PERFORMANCE CURVE

50Hz

Rev.C

3E(S) 32-200 **4 POLE**

32-200/0.55 (0.37 kW) - impeller diameter = 200 mm

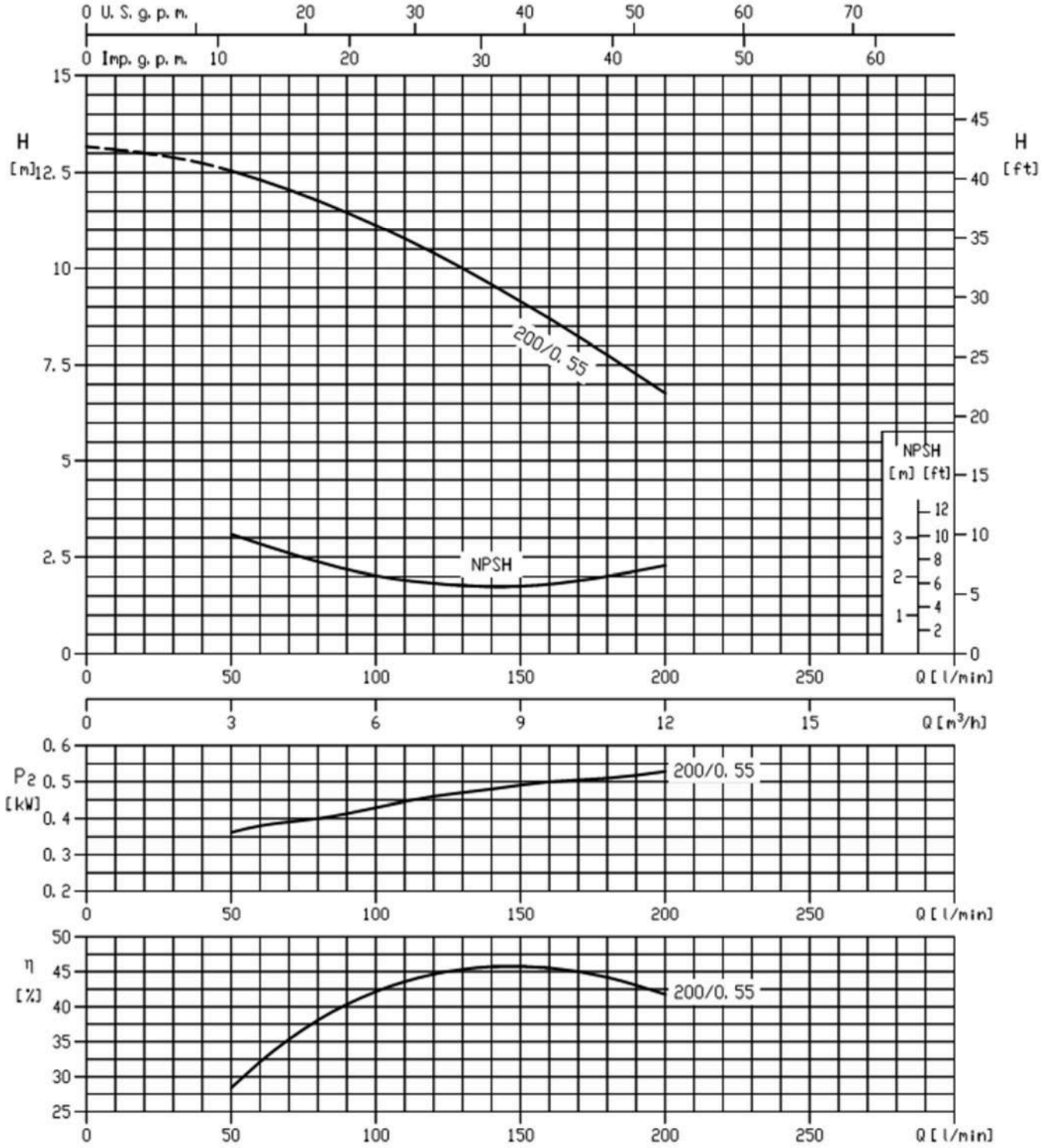

Rotation speed ≈ 1450 min^{-1}

Test standard : ISO 9906 Annex A

PERFORMANCE CURVE

50Hz

Rev.C

3E(S) 40-160 **4 POLE**

40-160/0.37R (0.37 kW) - impeller diameter = 151 mm
40-160/0.37 (0.37 kW) - impeller diameter = 166 mm

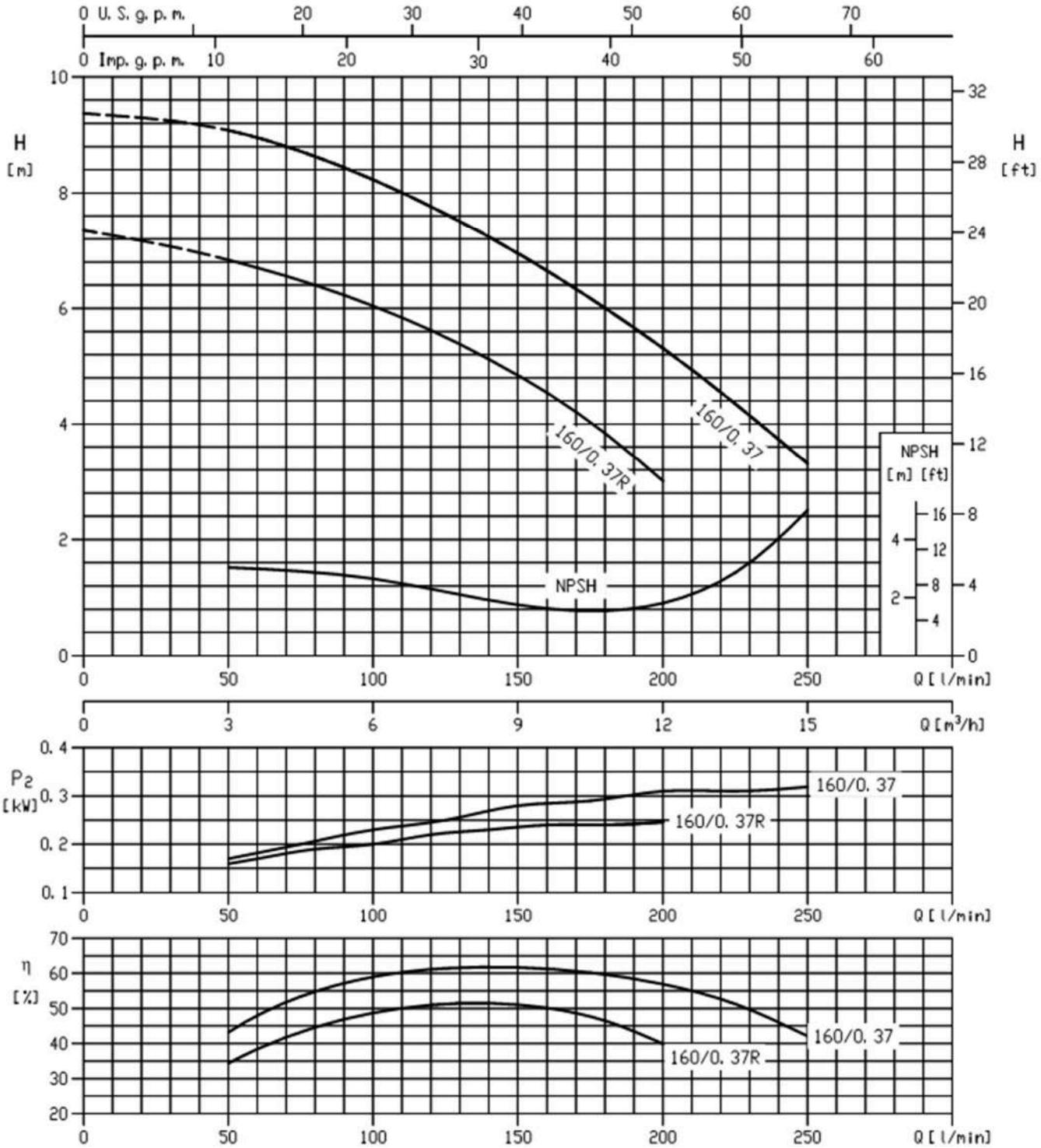

Rotation speed ≈ 1450 min^{-1}
Test standard : ISO 9906 Annex A

3E(S) 40-200 **4 POLE**

40-200/0.55 (0.55 kW) - impeller diameter = 200 mm

40-200/0.75 (0.75 kW) - impeller diameter = 224 mm

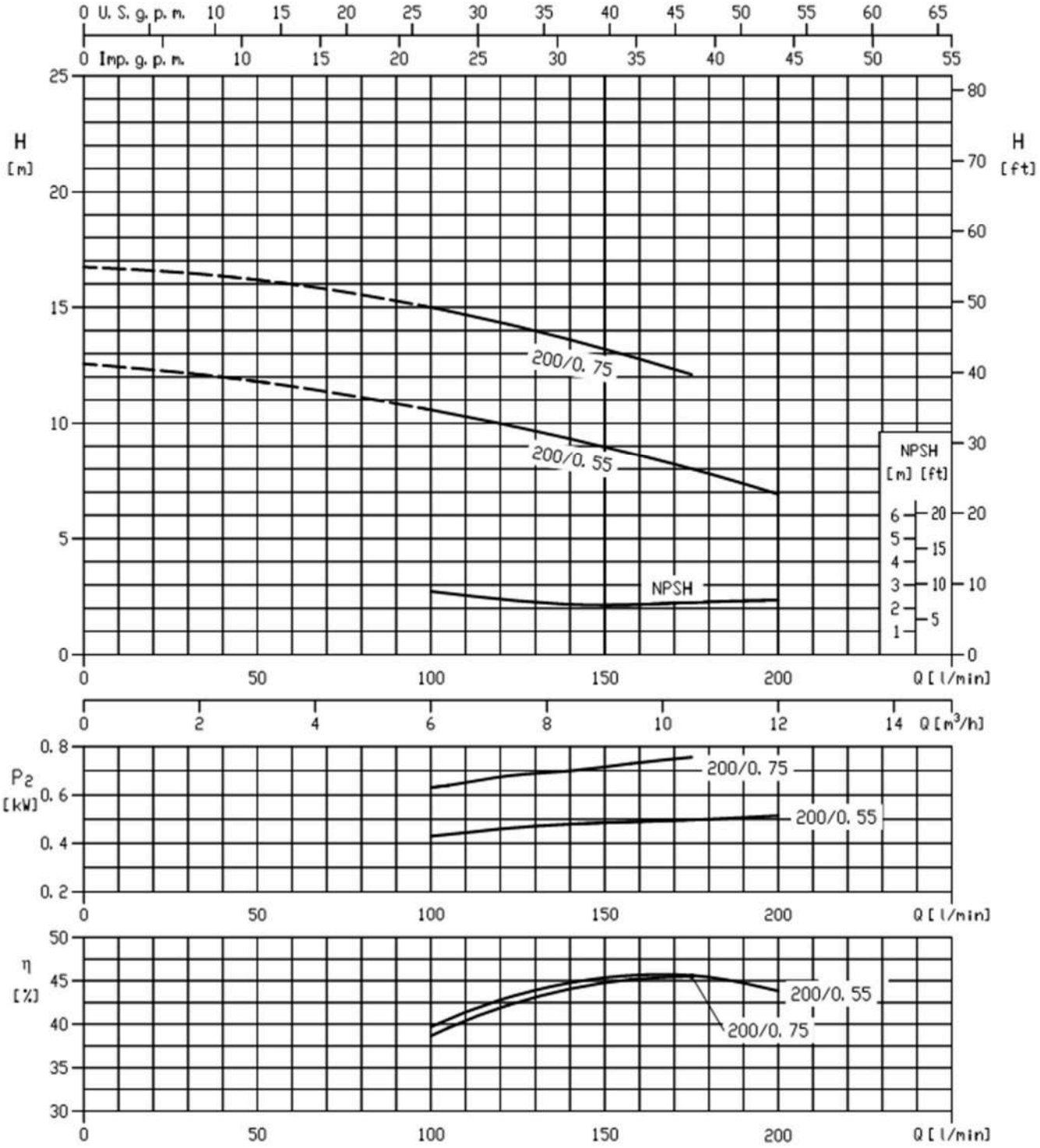

Rotation speed ≈ 1450 min^{-1}

Test standard : ISO 9906 Annex A

PERFORMANCE CURVE

50Hz

Rev.C

3E(S) 50-125 **4 POLE**

50-125/0.37 (0.37 kW) - impeller diameter = 140 mm

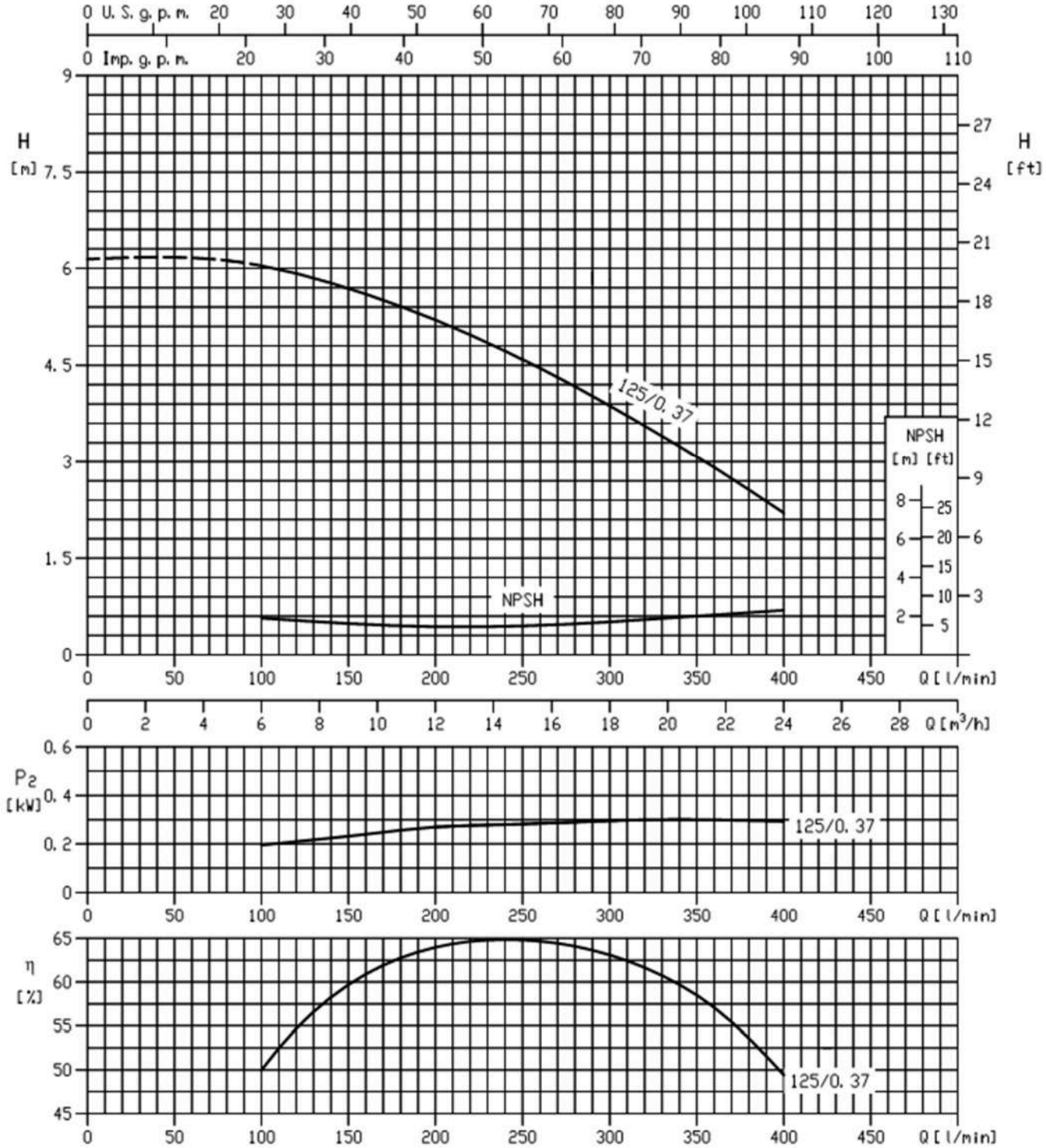

Rotation speed ≈ 1450 min^{-1}

Test standard : ISO 9906 Annex A

PERFORMANCE CURVE

50Hz

Rev.C

3E(S) 50-160 **4 POLE**

50-160/0.55 (0.55 kW) - impeller diameter = 166 mm

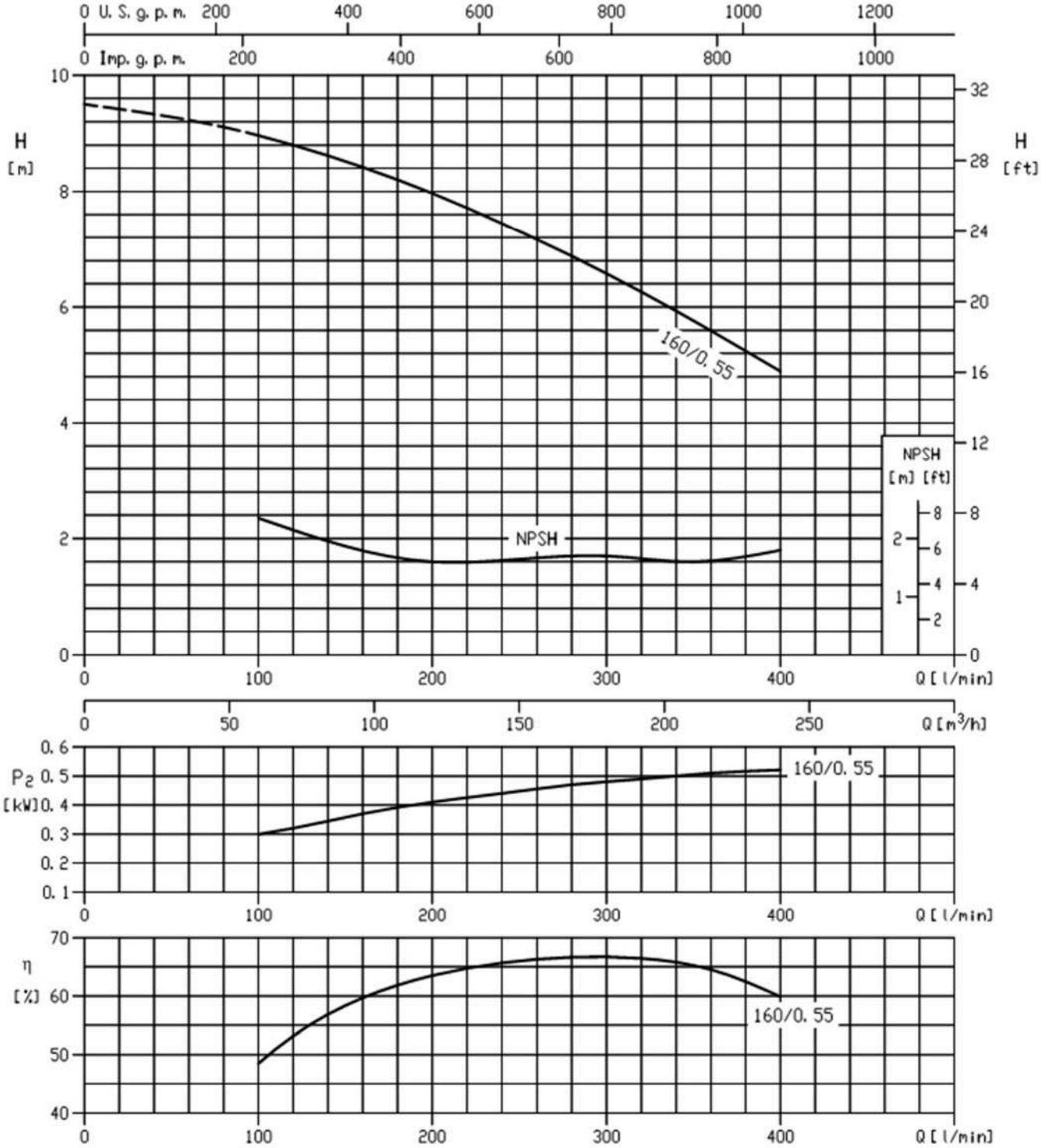

Rotation speed ≈ 1450 min^{-1}
Test standard : ISO 9906 Annex A

PERFORMANCE CURVE

50Hz

Rev.C

3E(S) 50-200 **4 POLE**

50-200/0.75 (0.75 kW) - impeller diameter = 183 mm
50-200/1.1 (1.1 kW) - impeller diameter = 200 mm
50-200/1.5 (1.5 kW) - impeller diameter = 224 mm

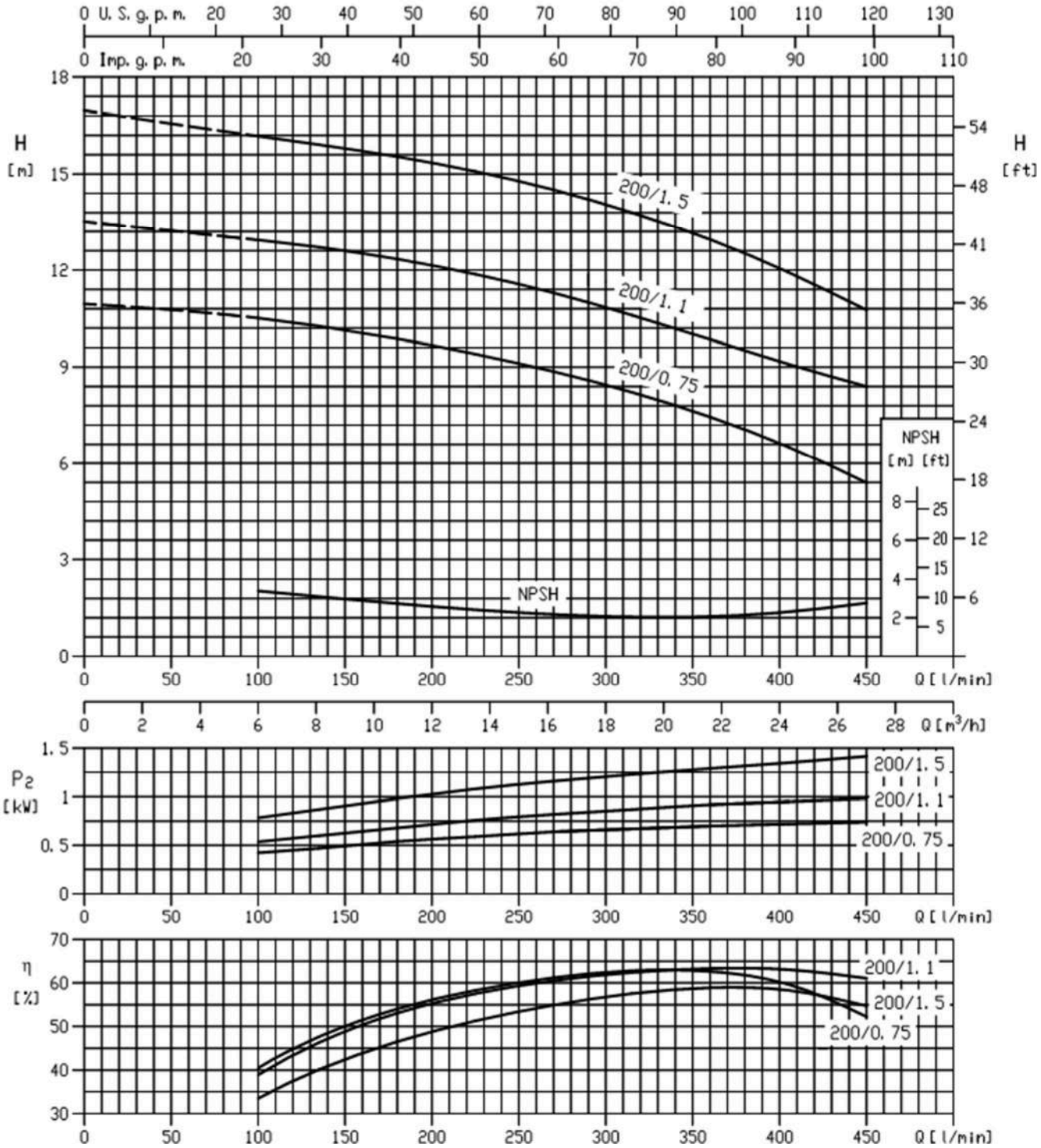

Rotation speed ≈ 1450 min^{-1}
Test standard : ISO 9906 Annex A

PERFORMANCE CURVE

50Hz

Rev.C

3E(S) 65-125 **4 POLE**

65-125 (0.55 kW) - impeller diameter = 140 mm

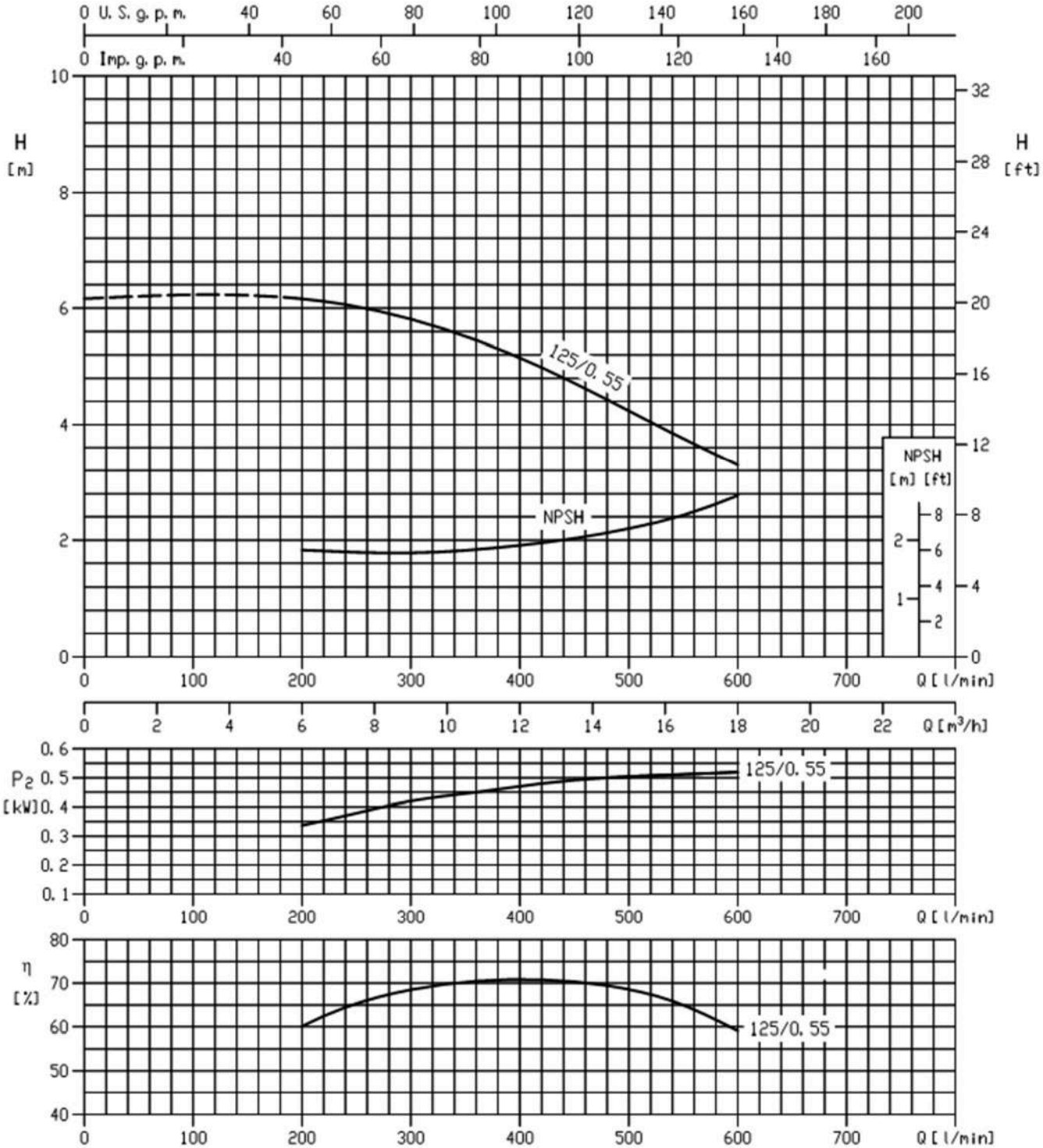

Rotation speed ≈ 1450 min^{-1}

Test standard : ISO 9906 Annex A

PERFORMANCE CURVE

50Hz

Rev.C

3E(S) 65-160 **4 POLE**

65-160/0.75(0.75 kW) - impeller diameter = 154 mm
65-160/1.1 (1.1 kW) - impeller diameter = 166 mm

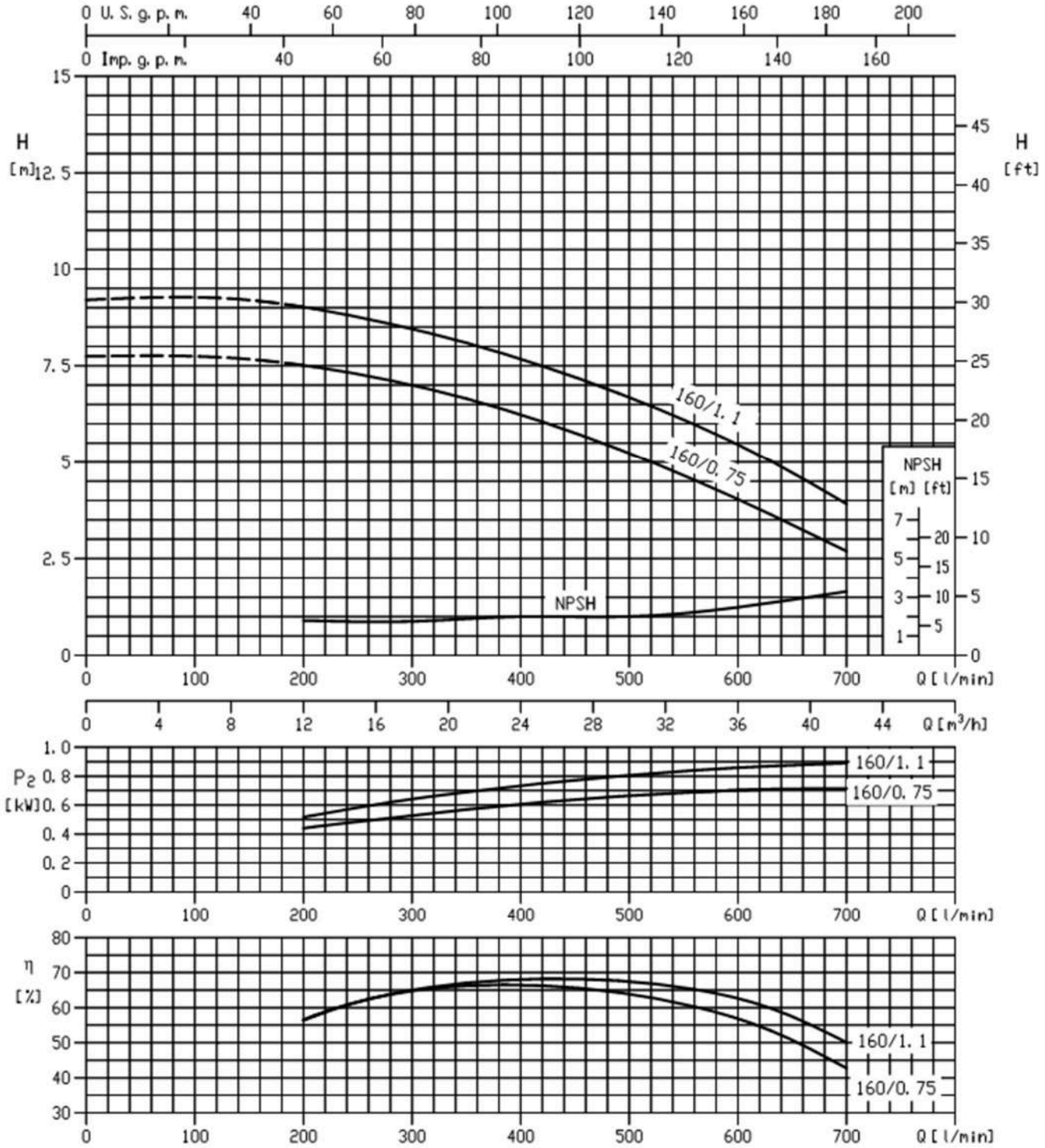

Rotation speed ≈ 1450 min^{-1}
Test standard : ISO 9906 Annex A

PERFORMANCE CURVE

50Hz

Rev.C

3E(S) 65-200 **4 POLE**

65-200/1.5 (1.5 kW) - impeller diameter = 200 mm
65-200/2.2 (2.2 kW) - impeller diameter = 224 mm

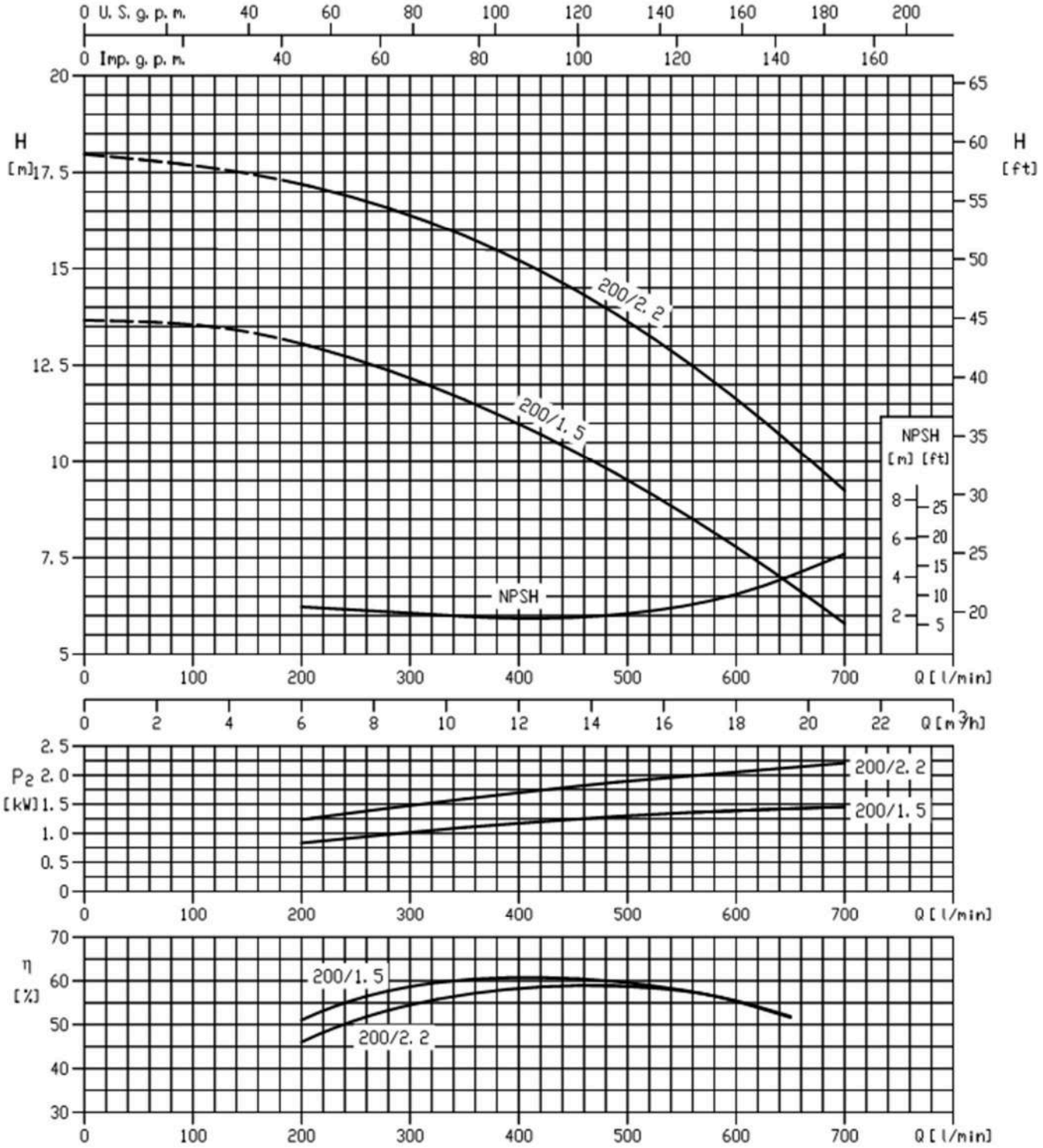

Rotation speed ≈ 1450 min^{-1}

Test standard : ISO 9906 Annex A

PERFORMANCE CURVE

50Hz

Rev.C

3E(S) 80-160 **4 POLE**

80-160/1.5 (1.5 kW) - impeller diameter = 168 mm

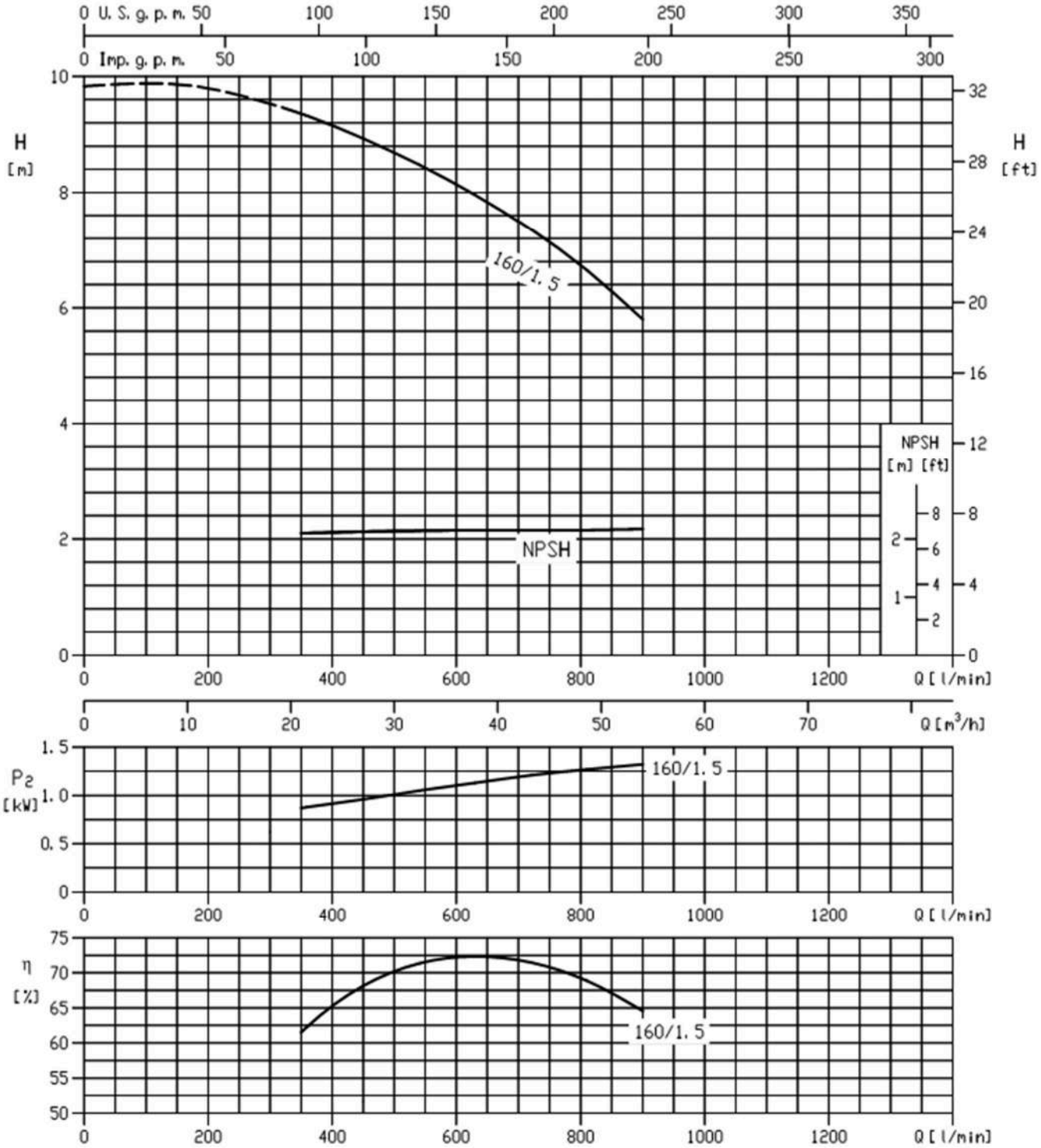

Rotation speed ≈ 1450 min^{-1}

Test standard : ISO 9906 Annex A

PERFORMANCE CURVE

50Hz

Rev.C

3E(S) 80-200 **4 POLE**

80-200/2.2 (2.2 kW) - impeller diameter = 201 mm
80-200/3.0 (3.0 kW) - impeller diameter = 212 mm

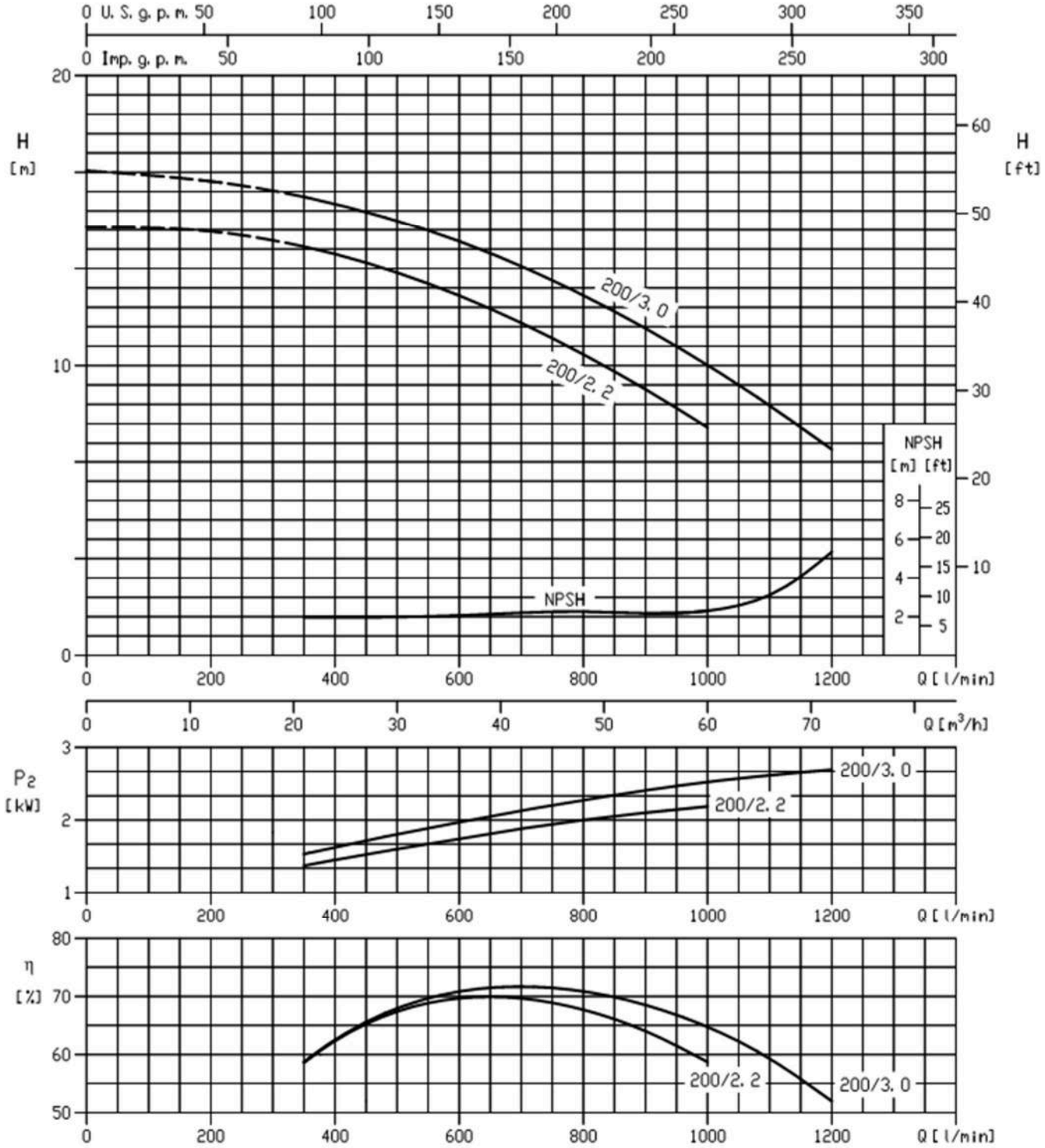

Rotation speed ≈ 1450 min^{-1}
Test standard : ISO 9906 Annex A

PERFORMANCE CURVE

50Hz

Rev.C

3E(S) 100-160 **4 POLE**

100-160/1.5 (1.5 kW) - impeller diameter = 156 mm
100-160/2.2 (2.2 kW) - impeller diameter = 174 mm

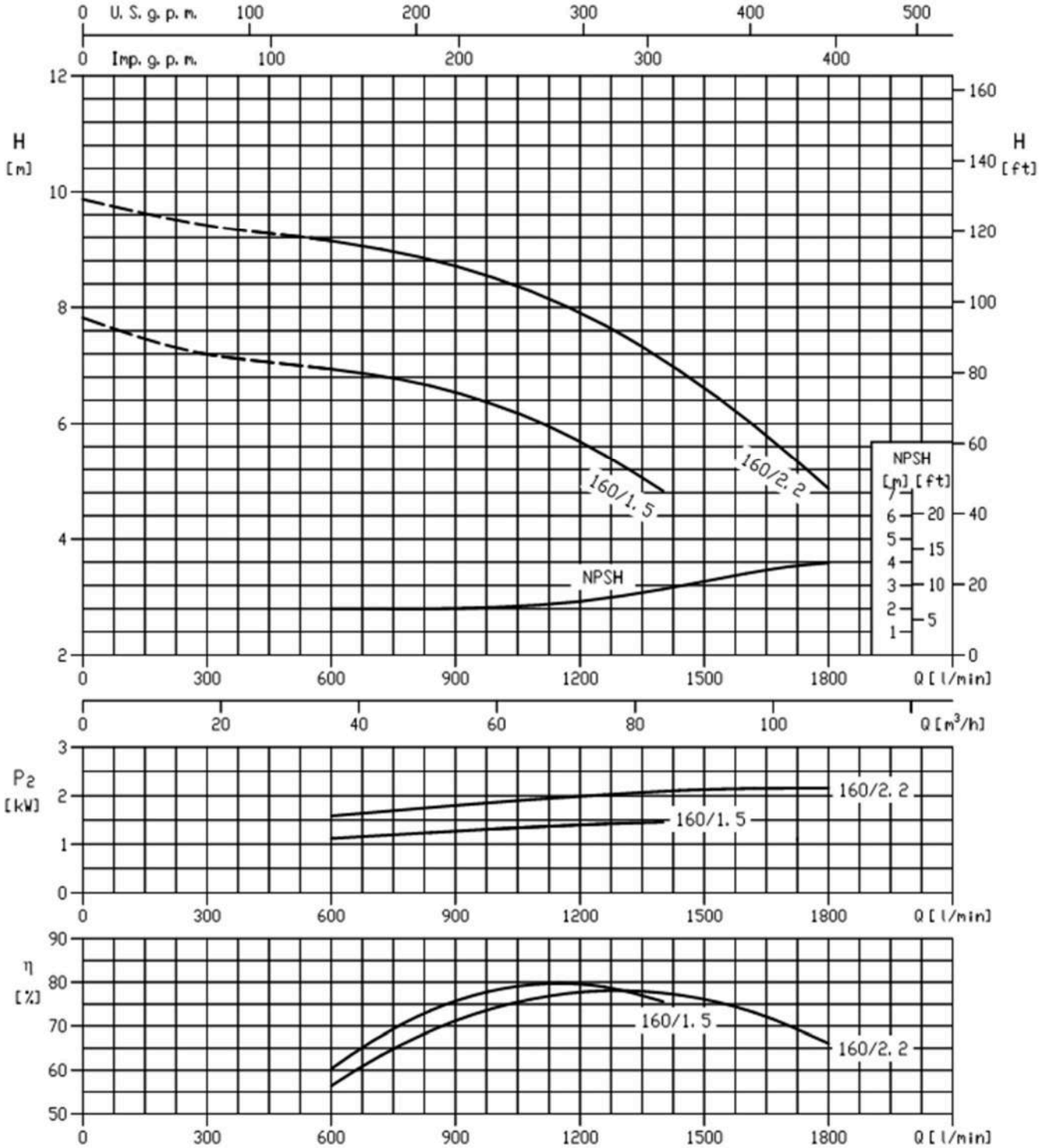

Rotation speed ≈ 1450 min^{-1}
Test standard : ISO 9906 Annex A

SECTIONAL VIEW DRAWING 3E 32-125,40-160,50-100/125/160,65-100/125,80-100

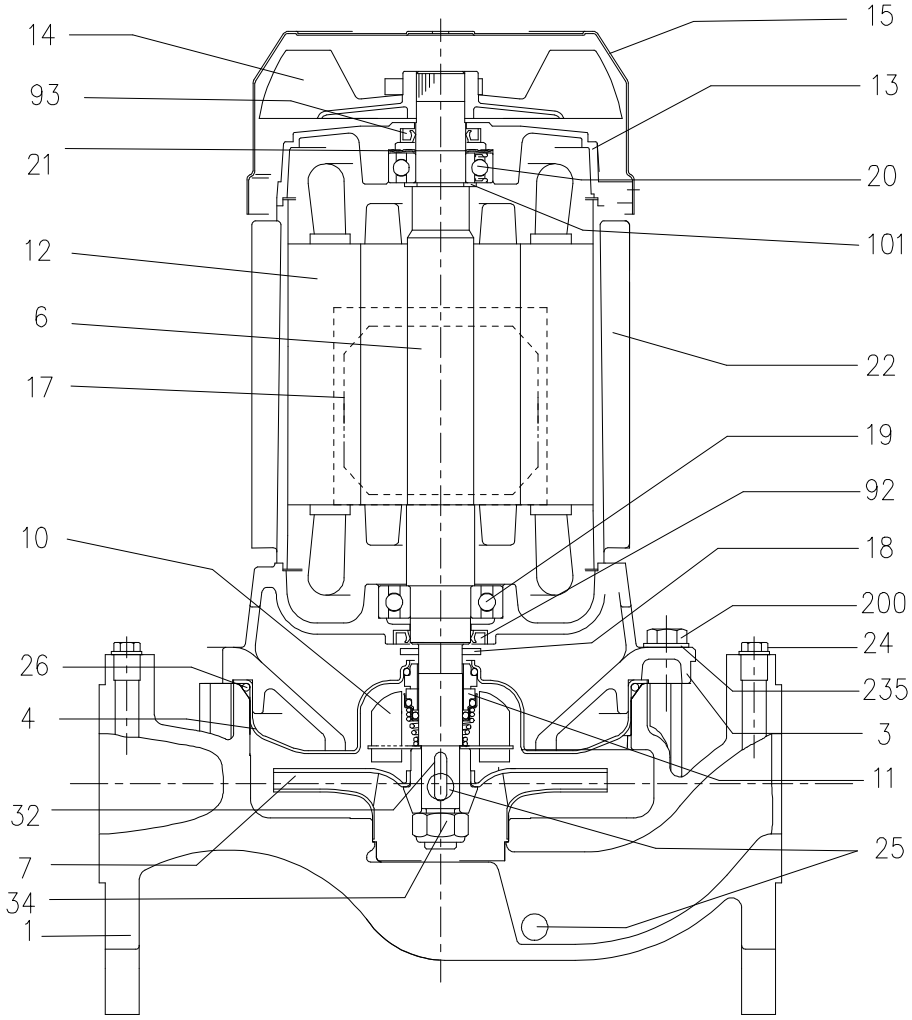

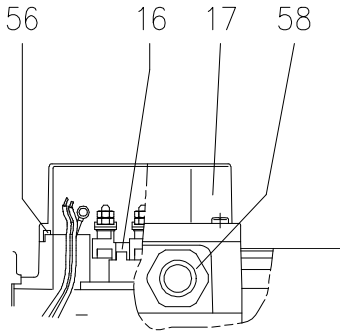

SECTIONAL VIEW TABLE 3E 32-125,40-160,50-100/125/160,65-100/125,80-100

No	PART NAME		MATERIAL	DIMENSIONS	STANDARD	Q.TY
1	Casing		Cast iron EN-GJL-250-EN 1561			1
3	Motor bracket		Aluminum AL-EN-1706-AC-46000-D			1
4	Casing cover		EN 1.4301(AISI 304)			1
6	Shaft with rotor - Wet extension		EN 1.4301(AISI 304)			1
7	Impeller		EN 1.4301(AISI 304)			1
10	Baffle		EN 1.4301(AISI 304)			1
11	Mechanical seal [1]					1
12	Motor frame with stator		-			1
13	Motor cover		Aluminum			1
14	Fan		PA			1
15	Fan cover		Fe P04 Galvanized			1
16	Terminal		-			1
17	Terminal box cover		Aluminum (three phase version)			1
18	Splash ring	Up to 0.75 kW		25x14.5x2.5	EBARA DRAWING	1
		From 1.1 to 4 kW		40x21.5x2		
19	Bearing [3]		•			1
20	Bearing [3]		•			1
21	Adjusting ring		Steel C70			1
22	Tie rod	Up to 3 kW	Fe 42 Galvanized	M5	EBARA DRAWING	4
		4 kW		M6		
24	Plug		Brass	G 1/4		2
25	Drain plug		Brass	G 1/4		4
26	O-ring	32-125,50-100,50-125,65-100,80-100	EPDM [2]	158.11x5.34	OR 6625	1
		40-160, 50-160, 65-125		183.52x5.34	OR 6720	
32	Key	Up to 0.75 kW	EN 1.4401(AISI 316)	4x4x14	UNI 6604	1
		From 1.1 to 4 kW		6x6x22		
34	Impeller nut	Up to 0.75 kW	EN 1.4301(AISI 304)	M10x1.25	UNI 7474	1
		From 1.1 to 4kW		M16x1.5		
56	Box gasket		NBR			1
58	Cable gland		-			1
92	Lip seal	Up to 0.75 kW		15x30x5	DIN 3760 without spring	1
		For 1.1 to 3 kW		25x40x7		
		4 kW		30x47X7		
93	Lip seal	Up to 0.75 kW		15x30x5	DIN 3760 without spring	1
		For 1.1 to 2.2 kW		17x32x6		
		From 3 to 4 kW		25x40x7		
200	Screw	32-125,50-100,65-100	Gv. Steel 8.8 strength class ISO 898-1	M6x25	UNI 5739	8
		50-125,80-100		M 8x30		
		40-160,50-160,65-125		M10x35		10
235	Washer	32-125,50-100,65-100	Galvanized Steel	6.4x12.5	UNI 6592	8
		50-125,80-100		8.4x17		
		40-160,50-160,65-125		10.5x21		10

[1] See MECHANICAL SEAL pages
[2] FPM for Q1AVGG,Q4Q1VGG
EPDM for Q1AEGG,Q4Q1EGG
[3] See BEARING Pages

SECTIONAL VIEW DRAWING 3E 40-200,65-160

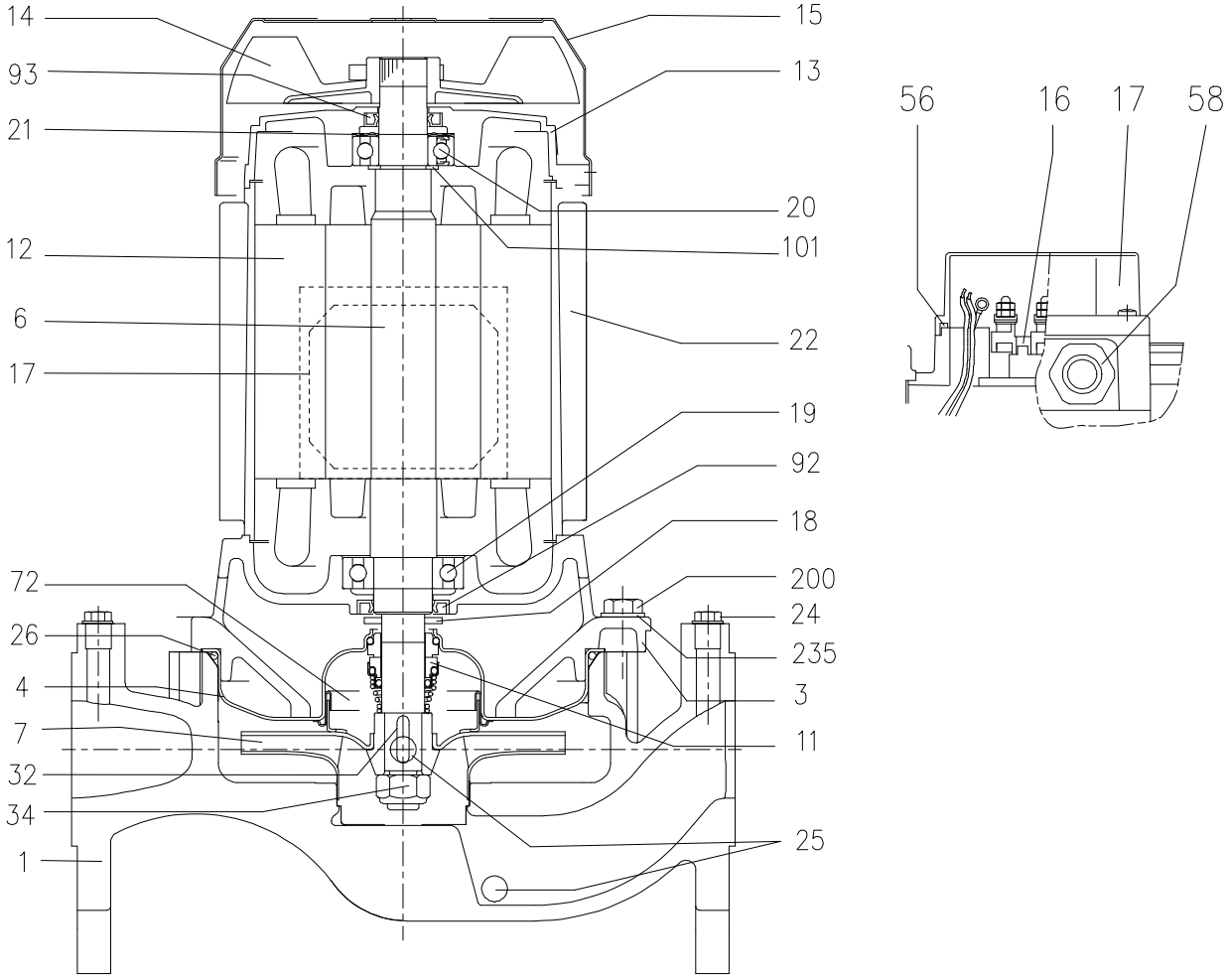

SECTIONAL VIEW TABLE 3E 40-200,65-160

No	PART NAME		MATERIAL	DIMENSIONS	STANDARD	Q.TY
1	Casing		Cast iron EN-GJL-250-EN 1561			1
3	Motor Bracket		Aluminum AL-EN-1706-AC-46000-D			1
4	Casing cover		EN 1.4301(AISI 304)			1
6	Shaft with rotor - Wet extension		EN 1.4301(AISI 304)			1
7	Impeller		EN 1.4301(AISI 304)			1
11	Mechanical seal [1]		-			1
12	Motor frame with stator		-			1
13	Motor cover		Aluminum			1
14	Fan		PA			1
15	Fan cover		Fe P04 Galvanized			1
16	Terminal		-			1
17	Terminal box cover		Aluminum (three phase version)			1
18	Splash ring			40x21.5x2	EBARA DRAWING	1
19	Bearing [3]		•			1
20	Bearing [3]		•			1
21	Adjusting ring		Steel C70			1
22	Tie rod	3 kW	Fe 42 Galvanized	M5	EBARA DRAWING	4
		From 4 to 7.5 kW		M6		
24	Plug	40-200	Brass	G 1/4		-
		65-160				2
25	Drain plug		Brass	G 1/4		4
26	O-ring		EPDM [2]	227.96x5.34	OR 6895	1
32	Key		EN 1.4401(AISI 316)	A 6x6x25	UNI 6604	1
34	Impeller nut		EN 1.4301(AISI 304)	M16x1.5	UNI 7474	1
56	Box gasket		NBR			1
58	Cable gland		-			1
72	Casing ring		EN 1.4301 (AISI 304)			1
92	Lip seal	3kW		25x40x7	DIN 3760 without spring	1
		From 4 to 7.5 kW		30x47X7		
93	Lip seal	Up to 4 kW		25x40x7	DIN 3760 without spring	1
		From 5.5 to 7.5 kW		30x47X7		
200	Screw		Gv. Steel 8.8 strength class ISO 898-1	M10x35		12
235	Washer		Galvanized Steel	10.5x21	UNI 6592	12

[1] See MECHANICAL SEAL pages
[2] FPM for Q1AVGG,Q4Q1VGG
EPDM for Q1AEGG,Q4Q1EGG
[3] See BEARINGS page

SECTIONAL VIEW DRAWING 3E 50-200,65-200,80-160/200,100-160

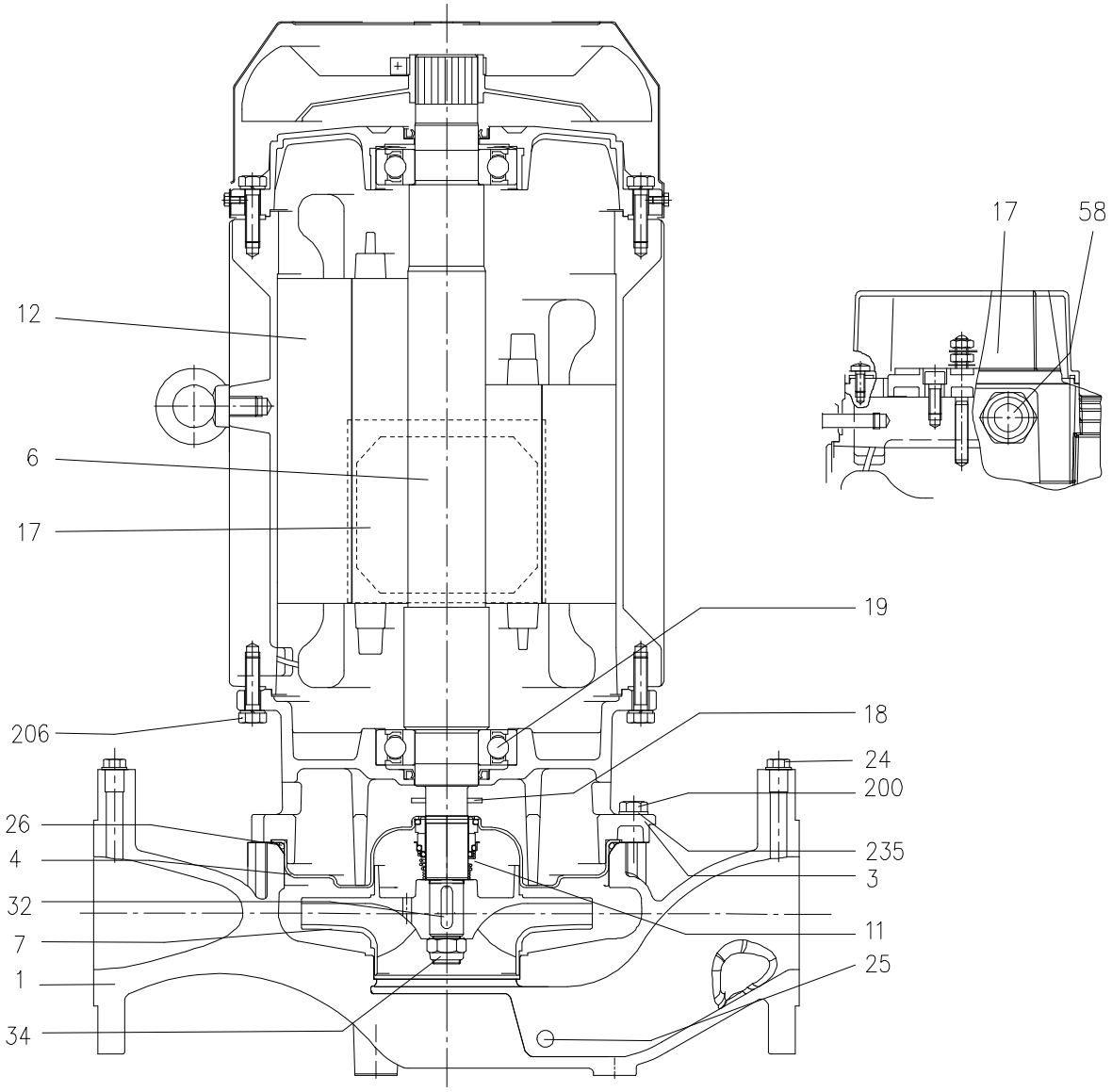

SECTIONAL VIEW TABLE 3E 50-200,65-200,80-160/200,100-160

No	PART NAME		MATERIAL	DIMENSIONS	STANDARD	Q.TY
1	Casing		Cast iron EN-GJL-250-EN 1561			1
3	Motor bracket		Aluminum AL-EN-1706-AC-46000-D			1
4	Casing cover [4]		EN 1.4301(AISI 304)			1
6	Shaft with rotor - Wet extension		EN 1.4301(AISI 304) [5]			1
7	Impeller [6]		EN 1.4301(AISI 304)			1
11	Mechanical seal [1]					1
12	Motor frame with stator		-			1
13	Motor cover		Aluminum			1
14	Fan		PA			1
15	Fan cover		Fe P04 Galvanized			1
16	Terminal		-			1
17	Terminal box cover		Aluminum (three phase version)			1
18	Splash ring	Up to11kW		40x21.5x2	EBARA DRAWING	1
		15 kW and above		50x29.5x3		
19	Bearing [3]		•			1
20	Bearing [3]		•			1
21	Adjusting ring		Steel C70			1
22	Tie rod	For 4 - 5.5 - 7.5 kW	Fe 42 Galvanized	M6	EBARA DRAWING	4
		For 9.2 to 11kW		M8		
24	Plug		Brass	G 1/4		2
25	Drain plug	50-200	Brass	G 1/4		4
		Other models				2
26	O-ring		EPDM [2]	227.96x5.34	OR 6895	1
32	Key	50-200,65-200,80-160/9.2,80-160/11	EN 1.4401(AISI 316)	A 6x6x25	UNI 6604	1
		80-160/15,80-200,100-160		A 8x7x30		
34	Impeller nut	50-200,65-200/9.2,65-200/11,80-160/9.2,80-160/11	EN 1.4301(AISI 304)	M16x1.5	UNI 7474	1
		65-200/15		M18x1.5		
		80-160/15,80-200,100-160		M20x1.5		
56	Box gasket		NBR			1
58	Cable gland		-			[7]
72	Casing ring [10]		EN 1.4301 (AISI 304)			1
92	Lip seal	From 5.5 kW to 7.5 kW		30x47X7	DIN 3760 without spring	1
		From 9.2 to 11		40x55x7		
		From 15kW to 22kW		45x60x7		
93	Lip seal	From 5.5 kW to 7.5 kW		30x47X7	DIN 3760 without spring	1
		From 9.2 to 11		40x55x7		
		From 15kW to 22kW		45x60x7		
101	Snap ring [8]		Carbon tool steels TC 80	Ø40	UNI 7435	1
200	Screw		Gv. Steel 8.8 strength class ISO 898-1	M10x35		12
206	Screw for Bracket [9]		Gv. Steel 8.8 strength class ISO 898-1	M10x40	UNI 5739	4
235	Washer		Galvanized Steel	10.5x21x2	UNI 6592	12

[1] See MECHANICAL SEAL page
[2] FPM for Q1AVGG,Q4Q1VGG
EPDM for Q1AEGG,Q4Q1EGG
[3] See BEARINGS page
[4] EN1.4404(AISI316L) for 100-160
[5] EN1.4404(AISI316L) for 100-160
[6] EN 1.4301 (AISI 304) for 50-200,65-200,
EN 1.4401(AISI 316) for 80 series, EN 1.4404(AISI 316L) for 100-160
[7] 1 for pumps with motor up to 11 kW
2 for pumps with 15 kW motor and above
[8] Only for pumps with 9.2 and 11 kW motor
[9] Only for pumps with 15 kW motor and above
[10] Only for 50-200, 65-200/9.2, 65-200/11

SECTIONAL VIEW DRAWING 3ES 32-125,40-160,50-100/125/160,65-100/125,80-100

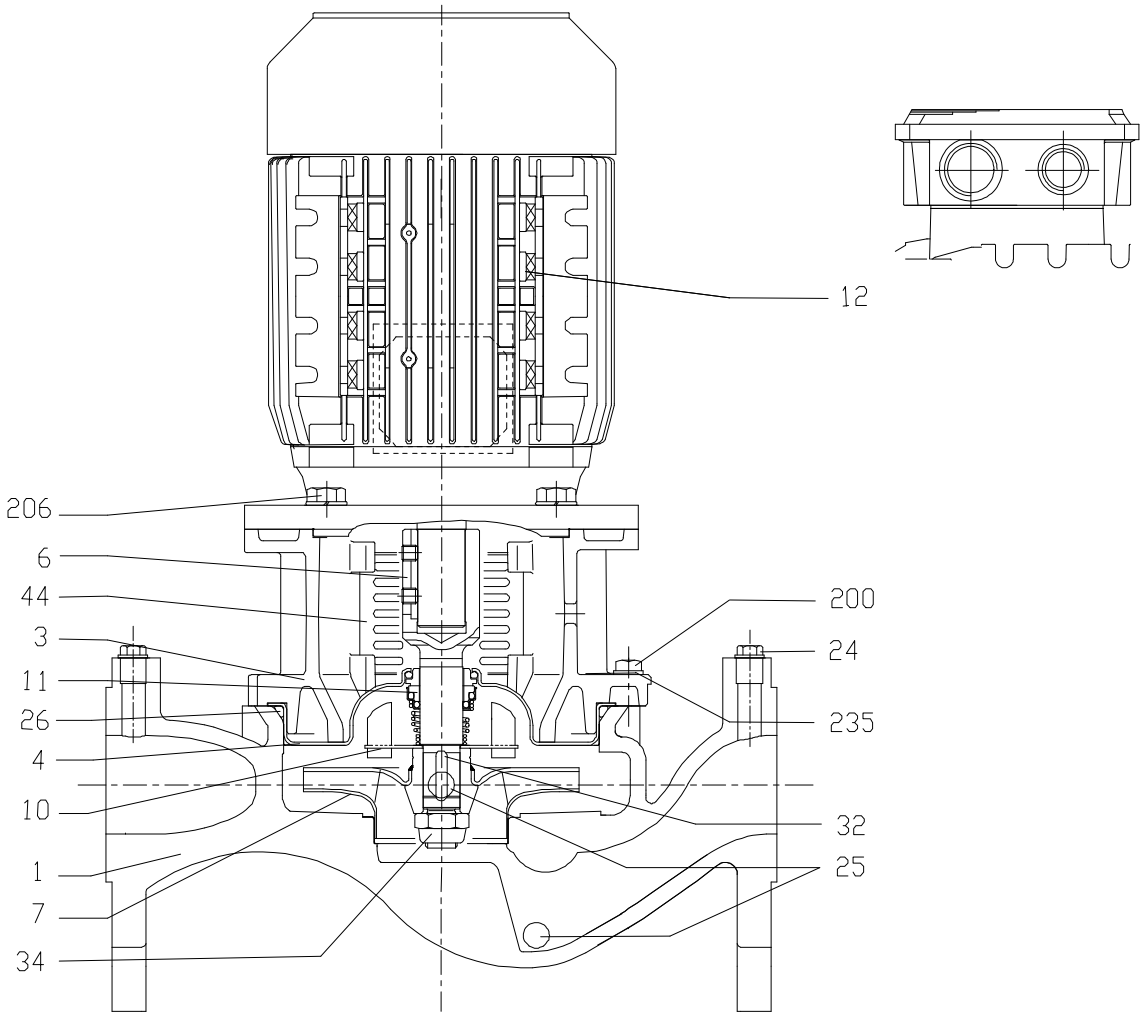

SECTIONAL VIEW TABLE 3ES 32-125,40-160,50-100/125/160,65-100/125,80-100

No	PART NAME		MATERIAL	DIMENSIONS	STANDARD	QTY
1	Casing		Cast iron EN-GJL-250-EN 1561			1
3	Motor bracket [3]		Cast iron EN-GJL-200-EN 1561			1
4	Casing cover		EN 1.4301(AISI 304)			1
6	Coupling - Wet extensions [4]		EN 1.4301(AISI 304)			1
7	Impeller		EN 1.4301(AISI 304)			1
10	Baffle		EN 1.4301(AISI 304)			1
11	Mechanical seal [1]		-			1
12	Motor					1
24	Priming plug		Brass	G 1/4		2
25	Draining plug		Brass	G 1/4		4
26	O-ring	32-125,50-100,50-125,65-100,80-100	EPDM [2]	158.11x5.34	OR 6625	1
		40-160,50-160,65-125		183.52x5.34	OR 6720	
32	Key	32-125,50-100	EN 1.4401(AISI 316)	4x4x14	UNI 6604	1
		40-160,50-125,50-160,65-100,65-125,80-100		6x6x22		
34	Impeller nut		EN 1.4301(AISI 304)	M16x1.5	UNI 7474	1
44	Protection		EN 1.4301(AISI 304)		EBARA DRAWING	2
200	Screw	32-125,50-100,65-100	Gv. Steel 8.8 strength class ISO 898-1	M6x25	UNI 5739	8
		50-125,80-100		M8x30		
		40-160, 50-160,65-125		M10x35		10
206	Screw for bracket	0.75kW to 2.2kW	Gv. Steel 8.8 strength class ISO 898-1	M10x25	UNI 5739	4
		3kW to 4kW		M12x30		
235	Washer	50-100, 65-100	Galvanized Steel	6.4x12.5	UNI 6592	8
		32-125,50-125,80-100		8.4x17		
		40-160,50-160,65-125		10.5x21		10

[1] See MECHANICAL SEAL pages
[2] FPM for Q1AVGG,Q4Q1VGG
EPDM for Q1AEGG,Q4Q1EGG
[3] Cast iron EN-GJL-200-EN 1561 for motor of 0.75kW
Aluminum AL-EN-1706-AC-46000-D for motor of 1.1 to 4kW
[4] See 3ES COUPLING page

SECTIONAL VIEW DRAWING 3ES 40-200,65-160

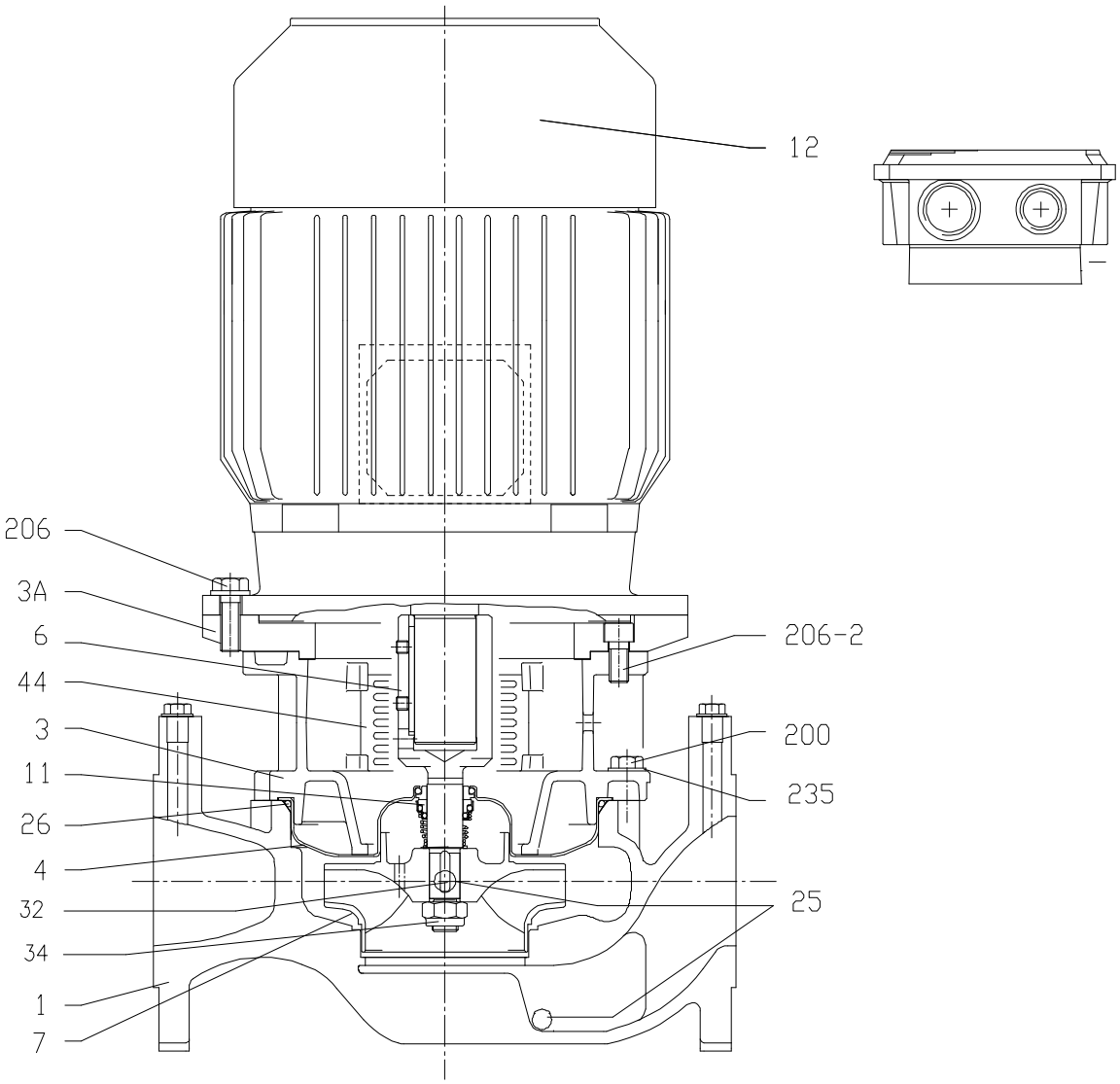

SECTIONAL VIEW TABLE 3ES 40-200,65-160

No	PART NAME		MATERIAL	DIMENSIONS	STANDARD	QTY
1	Casing		Cast iron EN-GJL-250-EN 1561			1
3	Motor bracket		Cast iron EN-GJL-200-EN 1561			1
3A	Adapter ring [4]		Cast iron EN-GJL-200-EN 1561			1
4	Casing cover		EN 1.4301(AISI 304)			1
6	Coupling - Wet extensions [3]		EN 1.4301(AISI 304)			1
7	Impeller		EN 1.4301(AISI 304)			1
11	Mechanical seal [1]		-			1
12	Motor					1
24	Priming plug	40-200	Brass	G 1/4		-
		65-160				2
25	Draining plug		Brass	G 1/4		4
26	O-ring		EPDM [2]	227.96x5.34	OR 6895	1
32	Key		EN 1.4401(AISI 316)	6x6x25	UNI 6604	1
34	Impeller nut		EN 1.4301(AISI 304)	M16x1.5	UNI 7474	1
44	Protection		EN 1.4301(AISI 304)		EBARA DRAWING	2
72	Casing ring		EN 1.4301(AISI 304)			1
200	Screw		Gv. Steel 8.8 strength class ISO 898-1	M 10x35		12
206	Screw for bracket		Gv. Steel 8.8 strength class ISO 898-1	M12x30	UNI 5739	4
206-2	Screw for adapter ring [4]		Gv. Steel 8.8 strength class ISO 898-1	M12x20	UNI 5931	4
235	Washer		Galvanized Steel	10.5x21	UNI 6592	12

[1] See MECHANICAL SEAL pages
[2] FPM for Q1AVGG,Q4Q1VGG
EPDM for Q1AEGG,Q4Q1EGG
[3] See 3ES COUPLING page
[4] Only for 80-125

SECTIONAL VIEW DRAWING 3ES 50-200,65-200,80-160/200,100-160

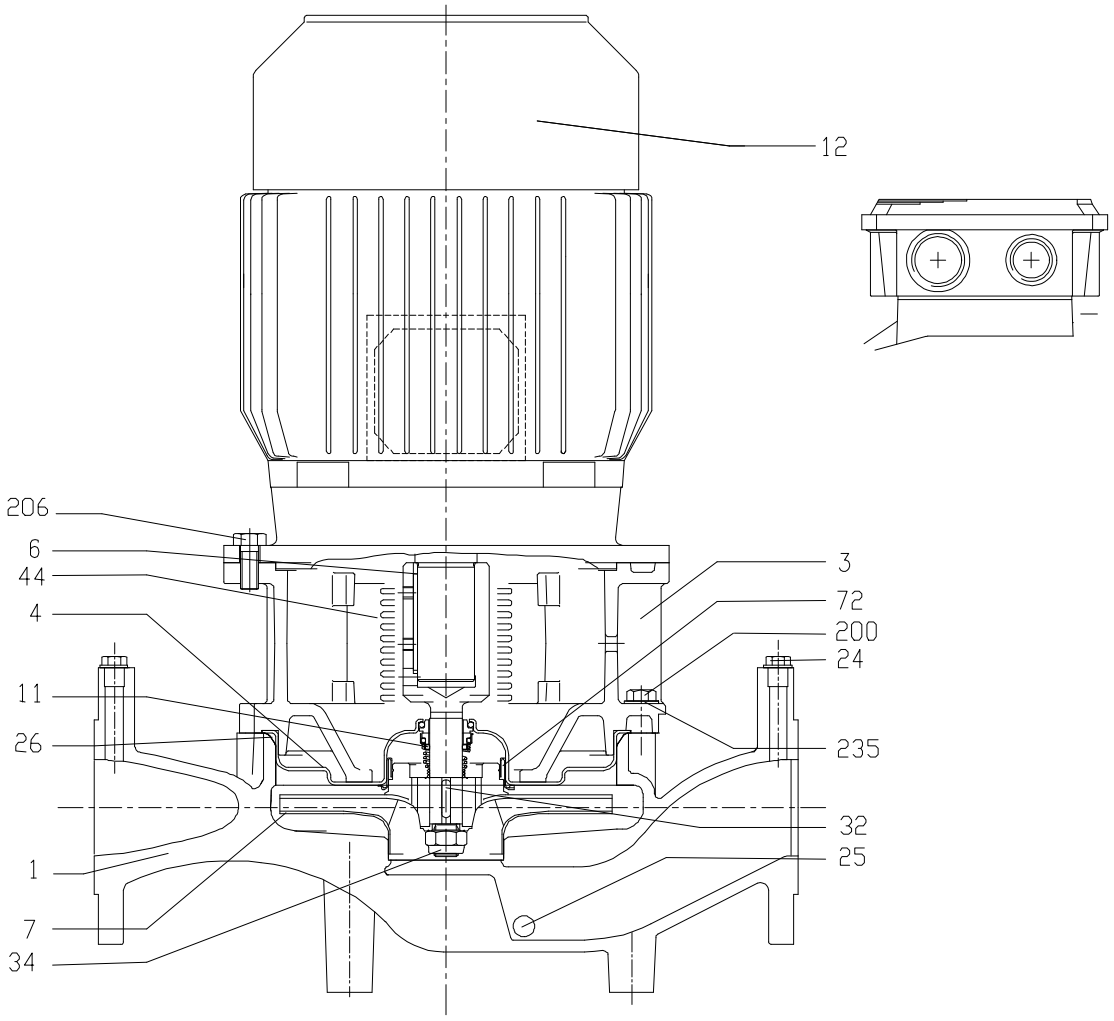

SECTIONAL VIEW TABLE 3ES 50-200,65-200,80-160/200,100-160

No	PART NAME		MATERIAL	DIMENSIONS	STANDARD	Q.TY
1	Casing		Cast iron EN-GJL250-EN 1561			1
3	Motor bracket		Cast iron EN-GJL-200-EN 1561			1
4	Casing cover [3]		EN 1.4301(AISI 304)			1
6	Coupling - Wet extensions [4]		EN 1.4301(AISI 304) [5]			1
7	Impeller [6]		-			1
11	Mechanical seal [1]		-			1
12	Motor					1
24	Priming plug		Brass	G 1/4		2
25	Drain plug	50-200	Brass	G 1/4		4
		Other models				2
26	O-ring		EPDM [2]	227.96x5.34	OR 6895	1
32	Key	50-200,65-200,80-160/9.2,80-160/11	EN 1.4401(AISI 316)	6x6x25	UNI 6604	1
		80-160/15,80-200,100-160		8x7x30		
34	Impeller nut	Up to11kW [7]	EN 1.4301(AISI 304)	M16x1.5	UNI 7474	1
		65-200/15		M18x1.5		
		15 kW and above		M20X1.5		
44	Protection		EN 1.4301(AISI 304)		EBARA	2
72	Casing ring [8]		EN 1.4301(AISI 304)			1
200	Screw		Gv. Steel 8.8 strength class ISO 898-1	M10x35	UNI 5739	12
206	Screw for bracket	From 5.5kW to 9.2kW	Gv. Steel 8.8 strength class ISO 898-1	M12x30	UNI 5739	4
		From 11kW to 18.5kW		M16x35		
		From 22kW to 37kW [9]		M16x45		
235	Washer		Galvanized Steel	10.5x21	UNI 6592	12

[1] See MECHANICAL SEAL pages
[2] FPM for Q1AVGG,Q4Q1VGG
EPDM for Q1AEGG,Q4Q1EGG
[3] EN 1.4404 (AISI 316L) for 100 series
[4] See 3ES COUPLING page
[5] EN 1.4404 (AISI 316L) for 100 series
[6] EN 1.4301(AISI 304) for 50,65 series;
EN 1.4401(AISI 316) for 80 series, EN 1.4404(AISI 316L) for 100 series
[7] Except for 100-160/11kW :M20x1.5
[8] Only for: 65-200
[9] Except for 80-200/22: M16x35

SECTIONAL VIEW DRAWING 3E4 32-160,40-160,50-125/160,65-125

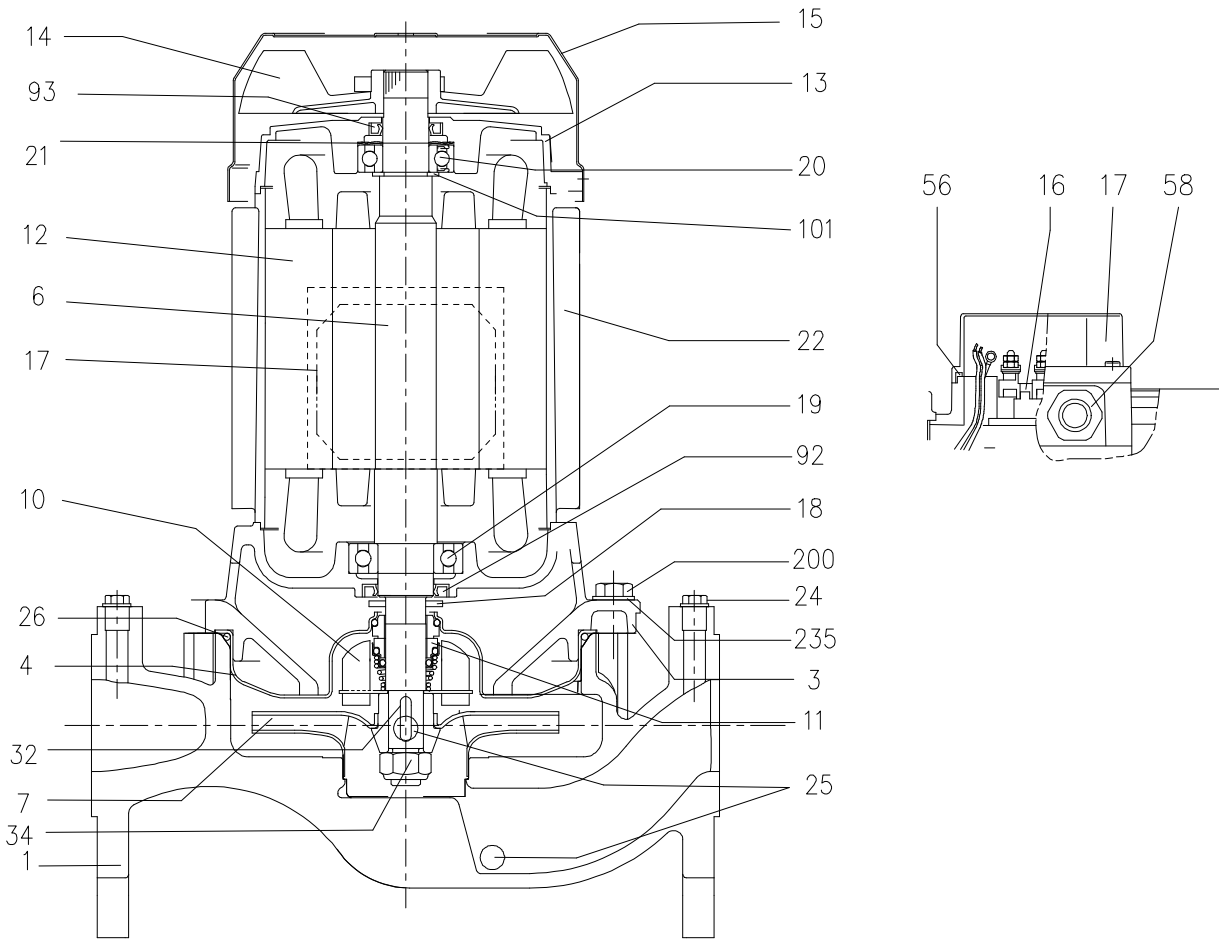

SECTIONAL VIEW TABLE 3E4 32-160,40-160,50-125/160,65-125

No	PART NAME		MATERIAL	DIMENSIONS	STANDARD	QTY
1	Casing		Cast iron EN-GJL-250-EN 1561			1
3	Motor bracket		Aluminum AL-EN-1706-AC-46000-D			1
4	Casing cover		EN 1.4301(AISI 304)			1
6	Shaft with rotor-Part in contact with liquid		EN 1.4301 (AISI 304)			1
7	Impeller		EN 1.4301(AISI 304)			1
10	Baffle		EN 1.4301(AISI 304)			1
11	Mechanical seal [1]		SiC/met.Carbon/EPDM			1
12	Motor frame with stator		-			1
13	Motor cover		Aluminum			1
14	Fan		PA			1
15	Fan cover		Fe P04 Galvanized			1
16	Terminal					1
17	Terminal box cover		Aluminum (three phase version)			1
18	Splash ring		NBR	40x21.5x2	EBARA DRAWING	1
19	Bearing [3]		•			1
20	Bearing [3]		•			1
21	Adjusting ring		Steel C70			1
22	Tie rod		Fe 42 Galvanized	M5	EBARA DRAWING	4
24	Plug		Brass	G1/4	DIN 906	2
25	Drain plug		Brass	G1/4	DIN 906	4
26	O-ring	50-125	EPDM [2]	158.11x5.34	OR 6625	1
		Other models		183.52x5.34	OR 6720	
32	Key		EN 1.4401 (AISI 316)	6x6x22	UNI 6604	1
34	Impeller nut		EN 1.4301(AISI 304)	M16x1.5	UNI 7474	1
56	Box gasket		NBR			1
58	Fasting nut					1
92	Lip seal		-	25x40x7	DIN 3760 without spring	1
93	Lip seal	50-125	-	15x30x5	DIN 3760 without spring	1
		Other models		17x32X7		
200	Screw	50-125	Gv. Steel 8.8 strength class ISO 898/1	M8x30	UNI 5739	8
		Other models		M10x35		10
235	Washer	50-125	Galvanized Steel	8.4x17	UNI 6592	8
		Other models		10.5x21		10

[1] See MECHANICAL SEAL page
[2] FPM for Q1AVGG,Q4Q1VGG
EPDM for Q1AEGG, Q4Q1EGG
[3] See BEARING Pages

SECTIONAL VIEW DRAWING 3E4 100-160

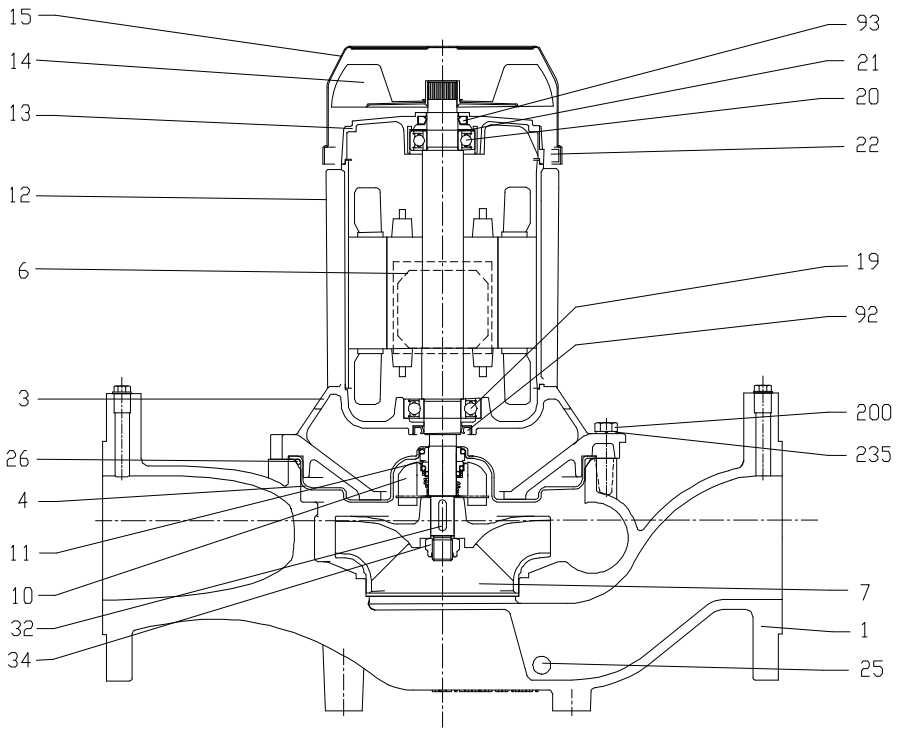

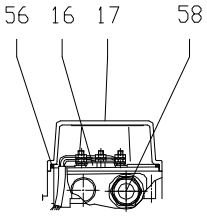

SECTIONAL VIEW TABLE 3E4 100-160

No	PART NAME		MATERIAL	DIMENSIONS	STANDARD	QTY
1	Casing		Cast iron EN-GJL-250-EN 1561			1
3	Motor bracket		Aluminum AL-EN-1706-AC-46000-D			1
4	Casing cover		EN 1.4404 (AISI316L)			1
6	Shaft with rotor		EN 1.4404(AISI316L) -Part in contact with liquid			1
7	Impeller		EN 1.4404 (AISI316L)			1
10	Baffle		EN 1.4301(AISI 304)			1
11	Mechanical seal [1]		SiC/met.Carbon/EPDM			1
12	Motor frame with stator		-			1
13	Motor cover		Aluminum			1
14	Fan		PA			1
15	Fan cover		Fe P04 Galvanized			1
16	Terminal		-			1
17	Terminal box cover		Aluminum			1
19	Bearing [3]		-			1
20	Bearing [3]		-			1
21	Adjusting ring		Steel C70			1
22	Tie rod	1.5 kW	Fe 42 Galvanized	M5		4
		2.2 kW		M6		
24	Plug		Brass	G1/4	EPE DRAWING	2
25	Drain Plug		Brass	G1/4	EPE DRAWING	2
26	O-ring		EPDM [2]	227.96x5.34	OR 6895	1
32	Key		EN 1.4404 (AISI316L)	6x6x22	UNI 6604	1
34	Impeller nut		EN 1.4404 (AISI 316L)	M16X1.5	UNI 7474	1
56	Box gasket		NBR			1
58	Fasting nut		-			1
92	Lip seal	1.5 kW	-	25x40x7	DIN 3760 without spring	1
		2.2 kW		30x47x7		
93	Lip seal		-	25x40x7		1
200	Screw		Gv. Steel 8.8 strength class ISO 898/1	M10x35	UNI 5739	12
235	Washer		Galvanized Steel	10.5x21	UNI 6592	12

[1] See MECHANICAL SEAL page
[2] FPM for Q1AVGG,Q4Q1VGG
EPDM for Q1AEGG, Q4Q1EGG
[3] See BEARING Pages

SECTIONAL VIEW DRAWING 3E4 32-200,40-200,65-160

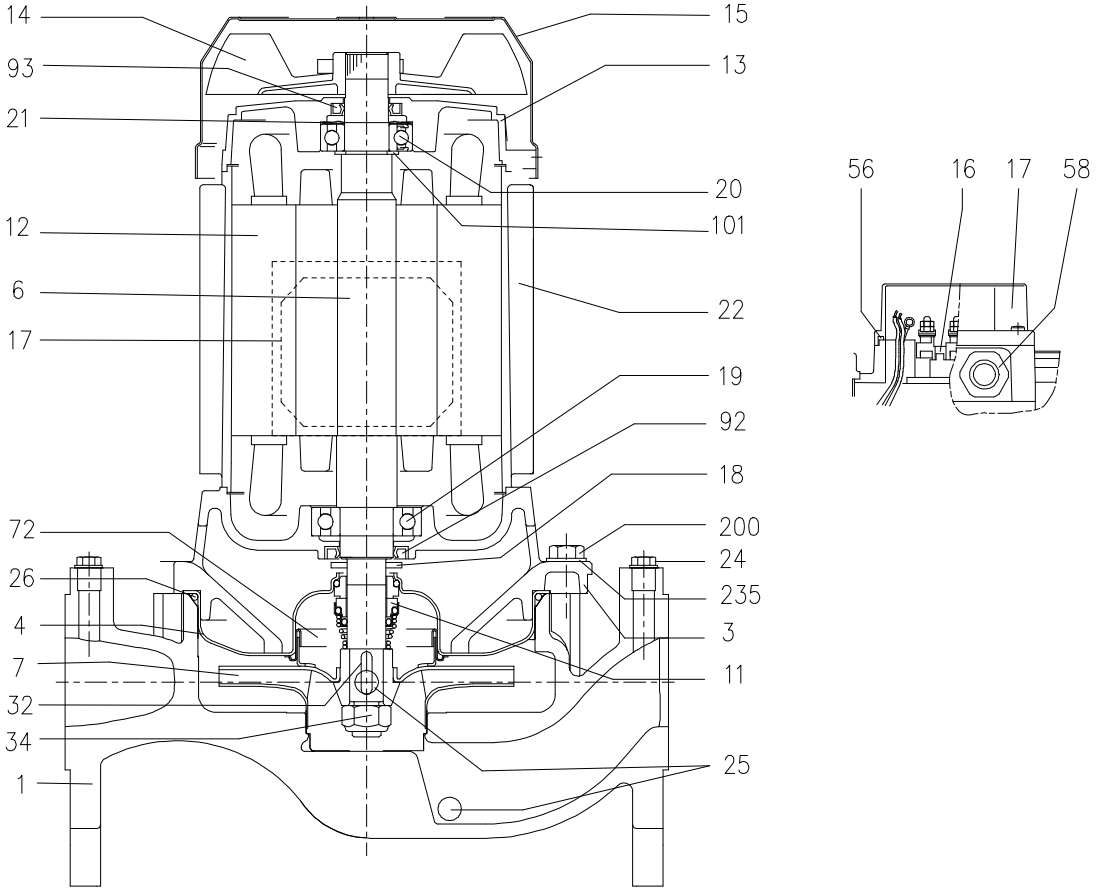

SECTIONAL VIEW TABLE 3E4 32-200,40-200,65-160

No	PART NAME	MATERIAL	DIMENSIONS	STANDARD	QTY
1	Casing	Cast iron EN-GJL-250-EN 1561			1
3	Motor bracket	Aluminum AL-EN-1706-AC-46000-D			1
4	Casing cover	EN 1.4301(AISI 304)			1
6	Shaft with rotor-Part in contact with liquid	EN 1.4301(AISI 304)			1
7	Impeller	EN 1.4301(AISI 304)			1
11	Mechanical seal [1]	SiC/met.Carbon/EPDM			1
12	Motor frame with stator	-			1
13	Motor cover	Aluminum			1
14	Fan	PA			1
15	Fan cover	Fe P04 Galvanized			1
16	Terminal				1
17	Terminal box cover	Aluminum (three phase version)			1
18	Splash ring	NBR	40x21.5x2	EBARA DRAWIN	1
19	Bearing [3]				1
20	Bearing [3]				1
21	Adjusting ring	Steel C70			1
22	Tie rod	Fe 42 Galvanized	M5	EBARA	4
24	Plug	Brass	G1/4	DIN 906	2
25	Drain plug	Brass	G1/4	DIN 906	4
26	O-ring	EPDM [2]	227.96x5.34	OR 6895	1
32	Key	EN 1.4401(AISI 316)	6x6x25	UNI 6604	1
34	Impeller nut	EN 1.4301(AISI 304)	M16x1.5	UNI 7474	1
56	Box gasket	NBR			1
58	Fasting nut				1
72	Casing ring (not for 80 version) [4]	EN 1.4301 (AISI 304)			1
92	Lip seal		25x40x7	DIN 3760 without spring	1
93	Lip seal 0.55kW		17x32X7	DIN 3760 without spring	1
	Lip seal From 0.75 kW to 1 kW		25x40x7		
200	Screw	Gv. Steel 8.8 strength class ISO 898/1	M10x35	UNI 5739	12
235	Washer	Galvanized Steel	10.5x21	UNI 6592	12

[1] See MECHANICAL SEAL page
[2] FPM for Q1AVGG,Q4Q1VGG
EPDM for Q1AEGG, Q4Q1EGG
[3] See BEARING Pages
[4] For Version 32-200,40-200,65-160

SECTIONAL VIEW DRAWING 3E4 50-200,65-200,80-160/200

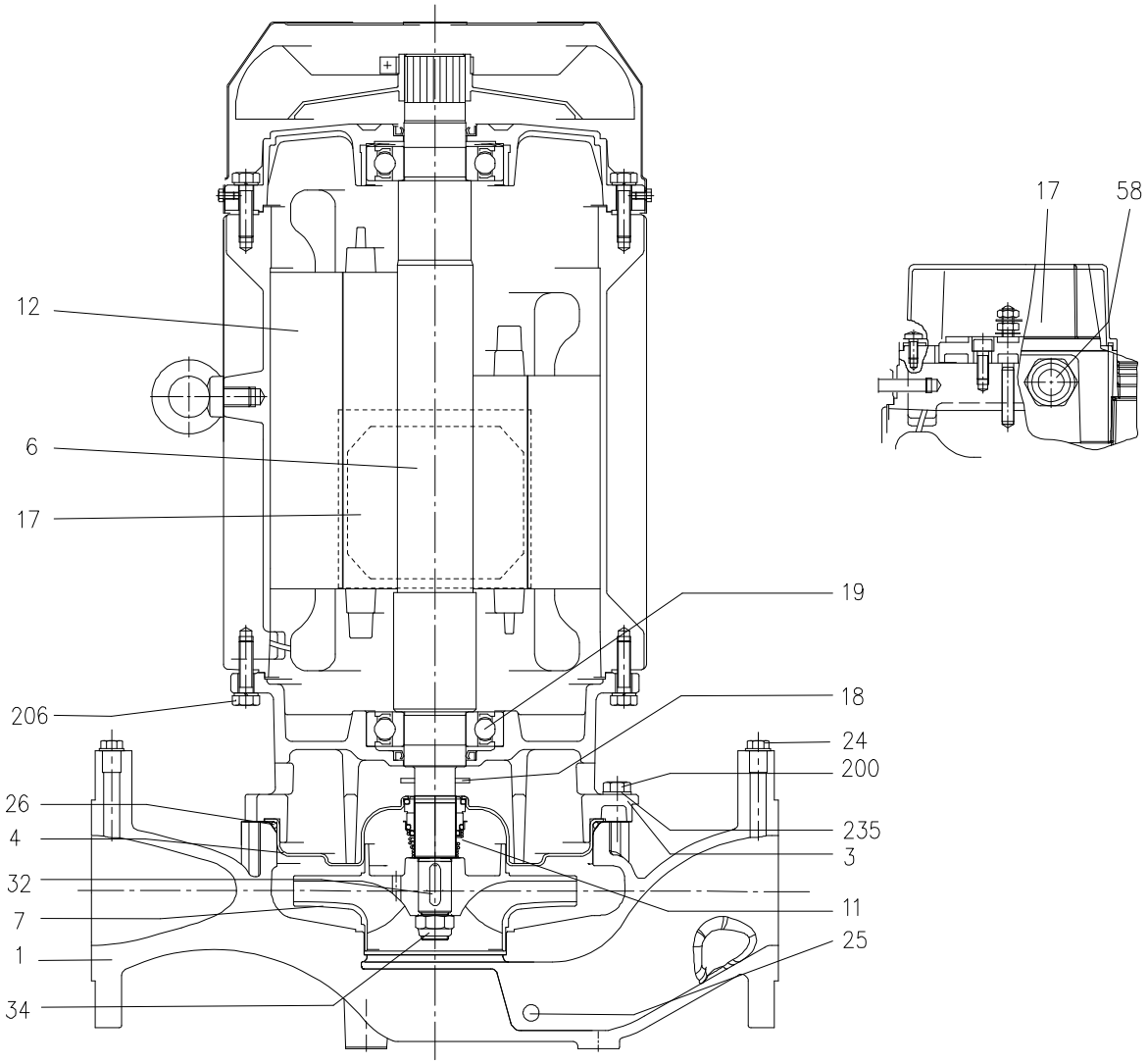

SECTIONAL VIEW TABLE 3E4 50-200,65-200,80-160/200

No	PART NAME		MATERIAL	DIMENSIONS	STANDARD	QTY
1	Casing		Cast iron EN-GJL-250-EN 1561			1
3	Motor bracket		Aluminum AL-EN-1706-AC-46000-D			1
4	Casing cover		EN 1.4301(AISI 304)			1
6	Shaft with rotor-Part in contact with liquid		EN 1.4301(AISI 304)			1
7	Impeller	50-200,65-200	EN 1.4301(AISI 304)			1
		80-160,80-200	EN 1.4401(AISI 316)			
11	Mechanical seal [1]		SiC/met.Carbon/EPDM			1
12	Motor frame with stator		-			1
13	Motor cover		Aluminum			1
14	Fan		PA			1
15	Fan cover		Fe P04 Galvanized			1
16	Terminal					1
17	Terminal box cover		Aluminum (three phase version)			1
18	Splash ring		NBR	40x21.5x2	EBARA DRAWING	1
19	Bearing [3]					1
20	Bearing [3]					1
21	Adjusting ring		Steel C70			1
22	Tie rod	Up to 1.5 kW	Fe 42 Galvanized	M5	EBARA DRAWING	4
		From 2.2 to 3 kW		M6		
24	Plug		Brass	G1/4	DIN 906	2
25	Drain plug	50-200	Brass	G1/4	DIN 906	4
		Other models				2
26	O-ring		EPDM [2]	227.96x5.34	OR 6895	1
32	Key		EN 1.4401(AISI 316)	6x6x25	UNI 6604	1
34	Impeller nut	50-200,65-200/1.5,80-160,80-200	EN 1.4301 (AISI 304)	M16x1.5	DIN 985	1
		65-200/2.2		M18x1.5		
56	Box gasket		NBR			1
58	Fasting nut					1
72	Casing ring (not for 80 version) [4]		EN 1.4301 (AISI 304)			1
92	Lip seal	Up to 1.5 kW	-	25x40x7	DIN 3760 without spring	1
		From 2.2 to 3 kW		30x47X7		
93	Lip seal		-	25x40x7	DIN 3760 without spring	1
200	Screw		Gv. Steel 8.8 strength class ISO 898/1	M10x35	UNI 5739	12
235	Washer		Galvanized Steel	10.5x21	UNI 6592	12

[1] See MECHANICAL SEAL page
[2] FPM for Q1AVGG,Q4Q1VGG
EPDM for Q1AEGG, Q4Q1EGG
[3] See BEARING Pages
[4] For Version 50-200,65-200

SECTIONAL VIEW DRAWING 3ES4 50-160,65-125

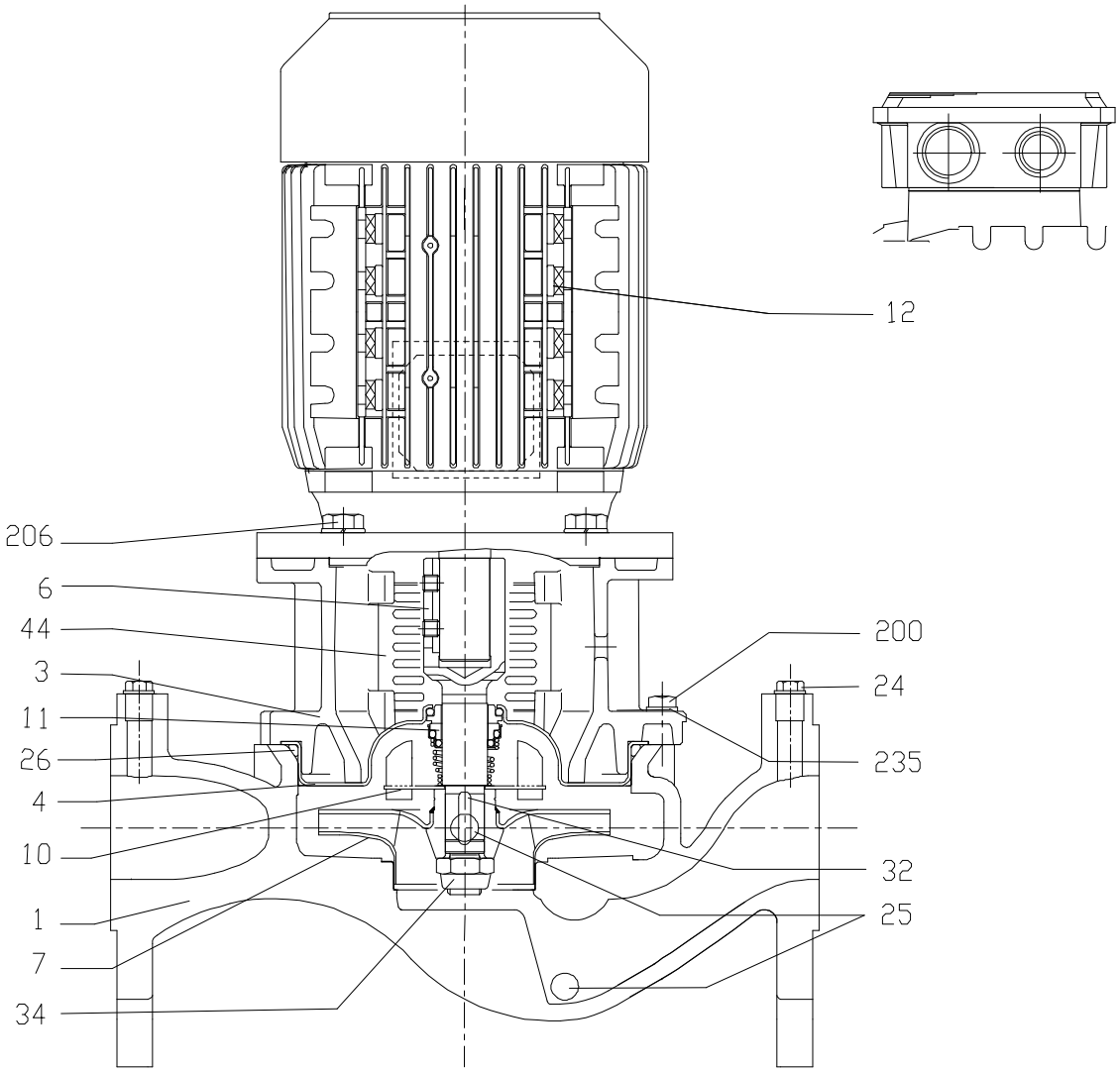

3ES4 50-160, 65-125 SECTIONAL VIEW TABLE

No	PART NAME	MATERIAL	DIMENSIONS	STANDARD	QTY
1	Casing	Cast iron EN-GJL-250-EN 1561			1
3	Motor bracket	Cast iron EN-GJL-200-EN 1561			1
4	Casing cover	EN 1.4301 (AISI 304)			1
6	Coupling - Part in contact with liquid	EN 1.4301 (AISI 304)			1
7	Impeller	EN 1.4301 (AISI 304)			1
10	Baffle	EN 1.4301 (AISI 304)			1
11	Mechanical seal [1]	SiC/met.Carbon/EPDM			1
12	Motor				1
24	Plug	Brass	G1/4	DIN 906	2
25	Drain plug	Brass	G1/4	DIN 906	4
26	O-ring	EPDM[2]	183.52x5.34	OR 6720	1
32	Key	EN 1.4401 (AISI 316)	6x6x22	UNI 6604	1
34	impeller nut	EN 1.4301(AISI 304)	M16x1.5	DIN 985	1
44	Protection	EN 1.4301 (AISI 304)		EBARA DRAWING	2
200	Screw	Gv. Steel 8.8 strength class ISO 898/1	M10x35	UNI 5739	10
206	Screw	Gv. Steel 8.8 strength class ISO 898/1	M10x25	UNI 5739	4
235	Washer	Galvanized Steel	10.5x21	UNI 6592	10

[1] See MECHANICAL SEAL page
[2] FPM for Q1AVGG
EPDM for Q1AEGG, Q4Q1EGG

SECTIONAL VIEW DRAWING 3ES4 100-160

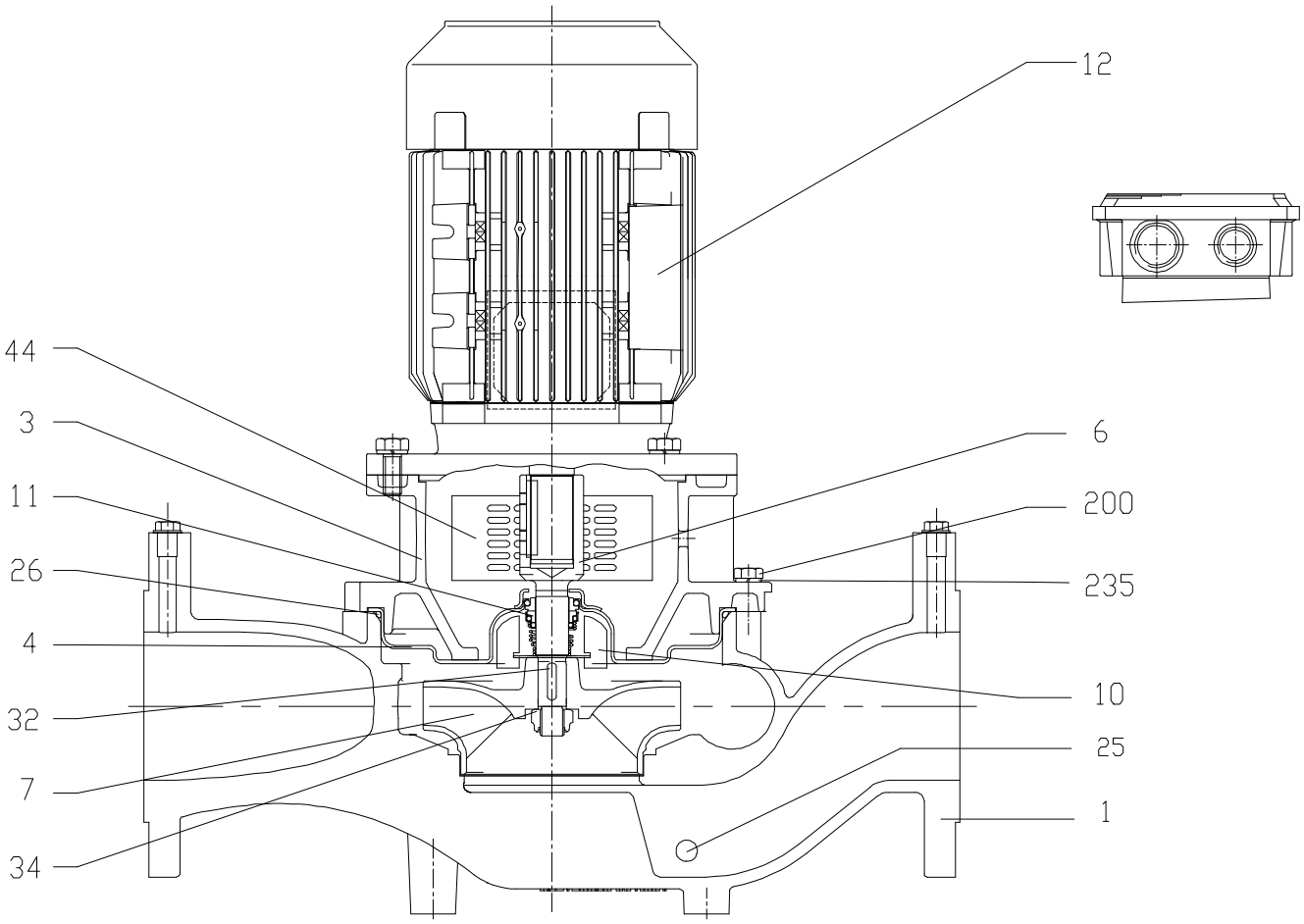

SECTIONAL VIEW TABLE 3ES4 100-160

No	PART NAME	MATERIAL	DIMENSIONS	STANDARD	QTY
1	Casing	Cast iron EN-GJL-250-EN 1561			1
3	Motor bracket	Aluminum AL-EN-1706-AC-46000-D			1
4	Casing cover	EN 1.4404 (AISI316L)			1
6	Coupling	EN 1.4404 (AISI316L)			1
7	Impeller	EN 1.4404 (AISI316L)			1
10	Baffle	EN 1.4301 (AISI304)			1
11	Mechanical seal [1]	SiC/met.Carbon/EPDM			1
12	Motor	-			1
24	Plug	Brass	G1/4	EPE DRAWING	2
25	Drain Plug	Brass	G1/4	EPE DRAWING	2
26	O-ring	EPDM (E option) [2]	227.96x5.34	OR 6895	1
32	Key	EN 1.4401 (AISI316)	6x6x22	UNI 6604	1
34	Impeller nut	EN 1.4404 (AISI316L)	M16x1.5	DIN 985	1
44	Protection	EN 1.4301 (AISI304)		EPE DRAWING	2
200	Screw	Gv. Steel 8.8 strength class ISO 898/1	M10x35	ISO 4017	12
235	Washer	Galvanized Steel	10.5x21	UNI 6592	12

[1] See MECHANICAL SEAL page
[2] FPM for Q1AVGG,Q4Q1VGG
EPDM for Q1AEGG, Q4Q1EGG

SECTIONAL VIEW DRAWING 3ES4 32-200,40-200,65-160

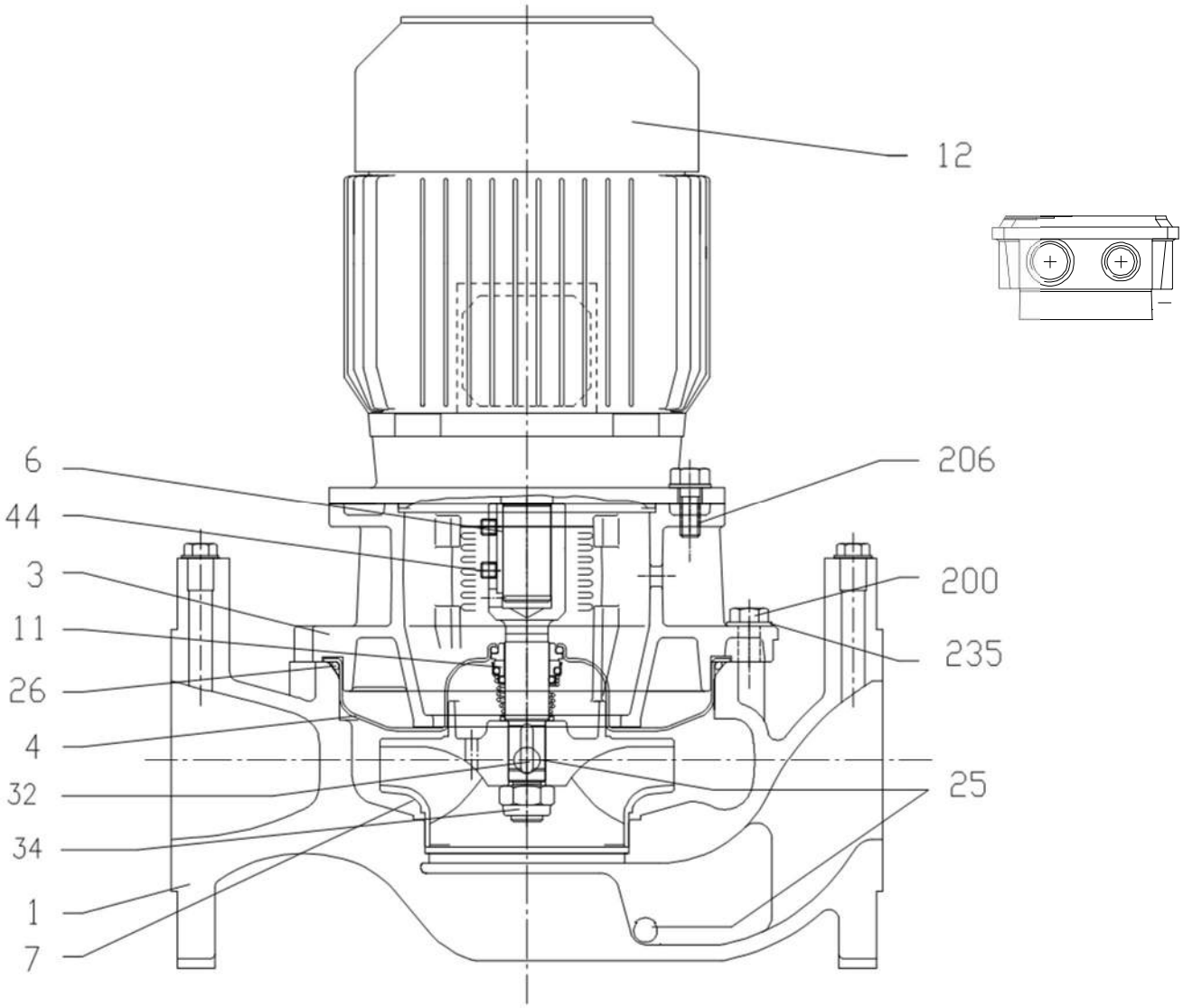

SECTIONAL VIEW TABLE 3ES4 32-200,40-200,65-160

No	PART NAME		MATERIAL	DIMENSIONS	STANDARD	QTY
1	Casing		Cast iron EN-GJL-250-EN 1561			1
3	Motor bracket		[3]			1
4	Casing cover		EN 1.4301 (AISI 304)			1
6	Coupling - Part in contact with liquid		EN 1.4301 (AISI 304)			1
7	impeller		EN 1.4301 (AISI 304)			1
11	Mechanical seal [1]		SiC/met.Carbon/EPDM			1
12	Motor					1
24	Plug	40-200	Brass	G1/4	DIN 906	-
		Other models				2
25	Drain plug		Brass	G1/4	DIN 906	4
26	O-ring		EPDM [2]	227.96x5.34	OR 6895	1
32	Key		EN 1.4401(AISI 316)	6x6x25	UNI 6604	1
34	impeller nut		EN1.4301(AISI 304)	M16x1.5	UNI 7474	1
44	Protection		EN 1.4301 (AISI 304)		EBARA DRAWING	2
72	Casing ring		EN 1.4301 (AISI 304)			1
200	Screw		Gv. Steel 8.8 strength class ISO 898/1	M10x35	UNI 5739	12
206	Screw		Gv. Steel 8.8 strength class ISO 898/1	M10x25	UNI 5739	4
235	Washer		Galvanized Steel	10.5x21	UNI 6592	12

[1] See MECHANICAL SEAL page
[2] FPM for Q1AVGG,Q4Q1VGG
EPDM for Q1AEGG, Q4Q1EGG
[3] Cast iron EN-GJL-200-EN 1561 for motor of 0.75kW
Aluminum AL-EN-1706-AC-46000-D for motor of 1.1kW

SECTIONAL VIEW DRAWING 3ES4 50-200,65-200,80-160/200

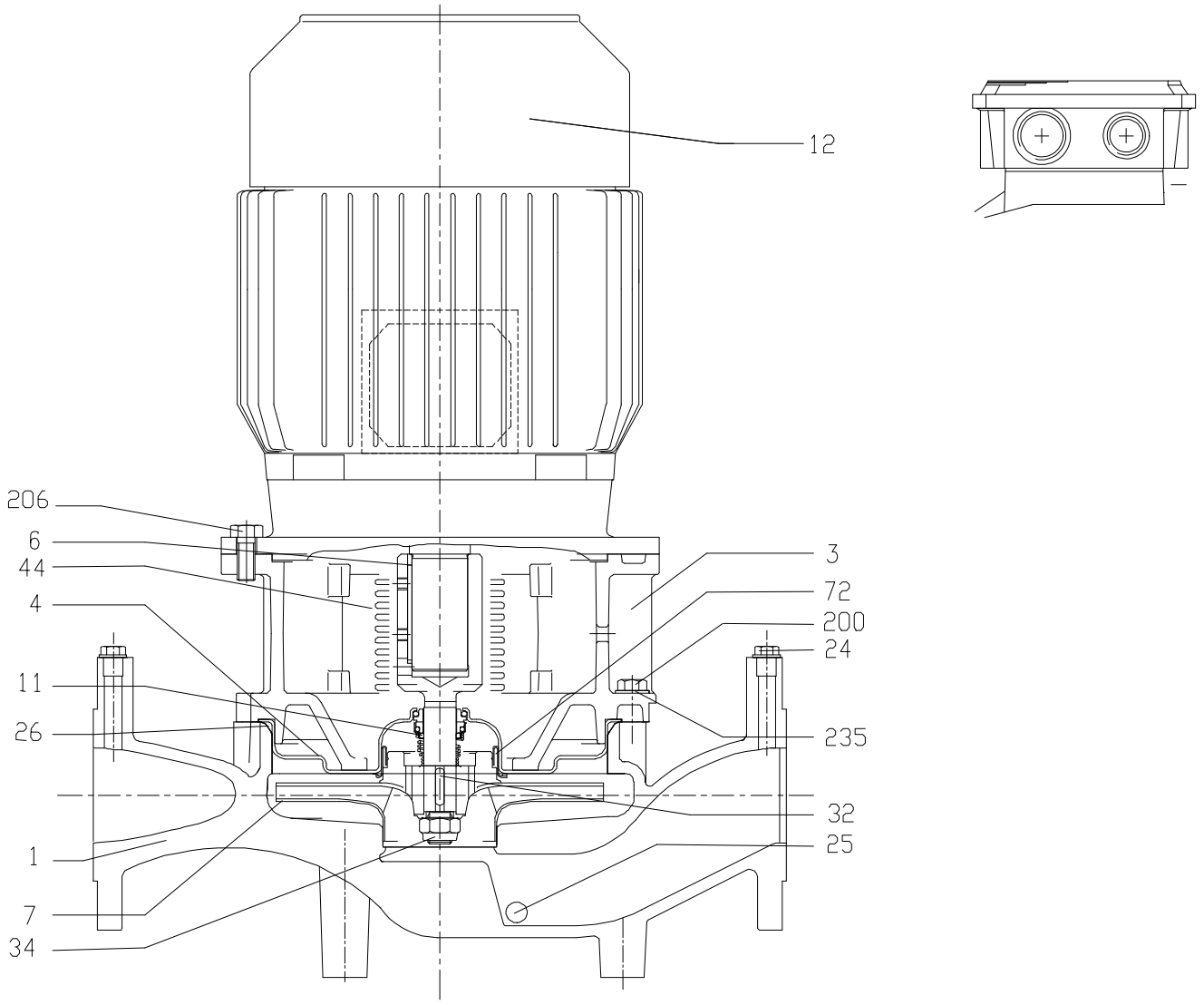

SECTIONAL VIEW TABLE 3ES4 50-200,65-200,80-160/200

No	PART NAME		MATERIAL	DIMENSIONS	STANDARD	QTY
1	Casing		Cast iron EN-GJL-250-EN 1561			1
3	Motor bracket		[3]			1
4	Casing cover		EN 1.4301 (AISI 304)			1
6	Coupling - Part in contact with liquid		EN 1.4301 (AISI 304)			1
7	impeller	50-200,65-200	EN 1.4301 (AISI 304)			1
		80-160,80-200	EN 1.4401 (AISI 316)			
11	Mechanical seal [1]		SiC/met.Carbon/EPDM			1
12	Motor					1
24	Plug		Brass	G1/4	DIN 906	2
25	Drain plug		Brass	G1/4	DIN 906	4
26	O-ring		EPDM [2]	227.96x5.34	OR 6895	1
32	Key		EN 1.4401 (AISI316)	6x6x25	UNI 6604	1
34	impeller nut		EN1.4301 (AISI 304)	M16x1.5	DIN 985	1
44	Protection		EN 1.4301 (AISI304)		EBARA DRAWING	2
72	Casin gring(not for 80 version) [4]		EN 1.4301 (AISI 304)			1
200	Screw		Gv. Steel 8.8 strength class ISO 898/1	M10x35	UNI 5739	12
206	Screw	from 0.55 to 1.5kW	Gv. Steel 8.8 strength class ISO 898/1	M10x25	UNI 5739	4
		for 2.2 and 3kW		M12x30		
235	Washer		Galvanized Steel	10.5x21	UNI 6592	12

[1] See MECHANICAL SEAL page
[2] FPM for Q1AVGG,Q4Q1VGG
EPDM for Q1AEGG, Q4Q1EGG
[3] Cast iron EN-GJL-200-EN 1561 for motor of 0.75kW
Aluminum AL-EN-1706-AC-46000-D for motor of 1.1kW
[4] Only for version 50-200, 65-200

BEARINGS 3E 2POLE

Pump type	Ball bearing	
	Pump side	Fan side
3E 32-125/0.37	6203	6202
3E 32-125/0.55		
3E 32-125/0.75		
3E 40-160/1.1	6205	6203
3E 40-160/1.5		
3E 40-160/2.2		
3E 40-200/3.0		6205
3E 40-200/4.0	6206	
3E 40-200/7.5	6306	6206
3E 50-100/0.37	6203	6202
3E 50-100/0.55		
3E 50-100/0.75		
3E 50-125/1.5	6205	6203
3E 50-125/2.2		
3E 50-160/3.0		6205
3E 50-160/4.0	6202	
3E 50-200/5.5	6306	6206
3E 50-200/7.5		
3E 50-200/11	6308	6208
3E 65-100/0.55	6203	6203
3E 65-100/0.75		
3E 65-100/1.1	6205	
3E 65-100/1.5		
3E 65-125/2.2		
3E 65-125/3.0		6205
3E 65-125/4.0	6206	
3E 65-160/5.5	6306	6206
3E 65-160/7.5		
3E 65-200/9.2	6308	6208
3E 65-200/11		
3E 65-200/15	6309	6309
3E 80-100/1.5	6205	6203
3E 80-100/2.2		
3E 80-160/9.2	6308	6208
3E 80-160/11		
3E 80-160/15	6309	6309
3E 80-200/18.5		
3E 80-200/22		
3E 100-160/11	6308	6208
3E 100-160/15	6309	6309
3E 100-160/18.5		

BEARINGS 3E 4POLE

Pump type	Ball bearing	
	Pump side	Fan side
3E4 32-160/0.37R	6205-2DW C3	6203-2DW C3
3E4 32-160/0.37		
3E4 32-200/0.55		
3E4 40-160/0.37R		
3E4 40-160/0.37		
3E4 40-200/0.55		
3E4 40-200/0.75	6205-ZZ C3	6205-ZZ C3
3E4 50-125/0.37	6205-2DW C3	6203-2DW C3
3E4 50-160/0.55		
3E4 50-200/0.75	6205-ZZ C3	6205-ZZ C3
3E4 50-200/1.1		
3E4 50-200/1.5		
3E4 65-125/0.55	6205-2DW C3	6203-2DW C3
3E4 65-160/0.75	6205-ZZ C3	6205-ZZ C3
3E4 65-160/1.1		
3E4 65-200/1.5		
3E4 65-200/2.2	6206-ZZ C3	
3E4 80-160/1.5	6205-ZZ C3	6205-ZZ C3
3E4 80-200/2.2	6206-ZZ C3	6205-ZZ C3
3E4 80-200/3.0		
3E4 100-160/1.5	6205-2RS1 C3	6205-2RS1 C3
3E4 100-160/2.2	6206-2RS1 C3	

BEARINGS 3ES 2POLE

Pump type	Ball bearing	
	Pump side	Fan side
3ES 32-125/0.75	6204	6204
3ES 40-160/1.5	6205	6205
3ES 40-160/2.2		
3ES 40-200/3.0	6206	6206
3ES 40-200/4.0	6306	6306
3ES 40-200/7.5	6208	6208
3ES 50-100/0.75	6204	6204
3ES 50-125/1.5	6205	6205
3ES 50-125/2.2		
3ES 50-160/3.0	6206	6206
3ES 50-160/4.0	6306	6306
3ES 50-200/5.5	6208	6208
3ES 50-200/7.5		
3ES 50-200/11	6309	6309
3ES 65-100/0.75	6204	6204
3ES 65-100/1.1		
3ES 65-100/1.5	6205	6205
3ES 65-125/2.2	6205	6205
3ES 65-125/3.0	6206	6206
3ES 65-125/4.0	6306	6306
3ES 65-160/5.5	6208	6208
3ES 65-160/7.5		
3ES 65-200/9.2		
3ES 65-200/11	6309	6309
3ES 65-200/15		
3ES 80-100/1.5	6205	6205
3ES 80-100/2.2		
3ES 80-160/9.2	6208	6208
3ES 80-160/11	6309	6309
3ES 80-160/15		
3ES 80-200/18.5		
3ES 80-200/22	6311	6311
3ES 100-160/11	6309	6309
3ES 100-160/15		
3ES 100-160/18.5		

BEARINGS 3ES 4POLE

Pump type	Ball bearing	
	Pump side	Fan side
3ES4 32-200/0.55	6204-2Z C3	6204-2Z C3
3ES4 40-200/0.55		
3ES4 40-200/0.75		
3ES4 50-160/0.55	6204-2Z C3	6204-2Z C3
3ES4 50-200/0.75		
3ES4 50-200/1.1	6205-2Z C3	6205-2Z C3
3ES4 50-200/1.5		
3ES4 65-125/0.55	6204-2Z C3	6204-2Z C3
3ES4 65-160/0.75		
3ES4 65-160/1.1	6205-2Z C3	6205-2Z C3
3ES4 65-200/1.5		
3ES4 65-200/2.2	6206-2Z C3	6206-2Z C3
3ES4 80-160/1.5	6205-2Z C3	6205-2Z C3
3ES4 80-200/2.2	6206-2Z C3	6206-2Z C3
3ES4 80-200/3.0		
3ES4 100-160/1.5	6205-2Z C3	6205-2Z C3
3ES4 100-160/2.2	6206-2Z C3	6206-2Z C3

MECHANICAL SEAL (Standard and Special version) 3E 3ES 2 POLE

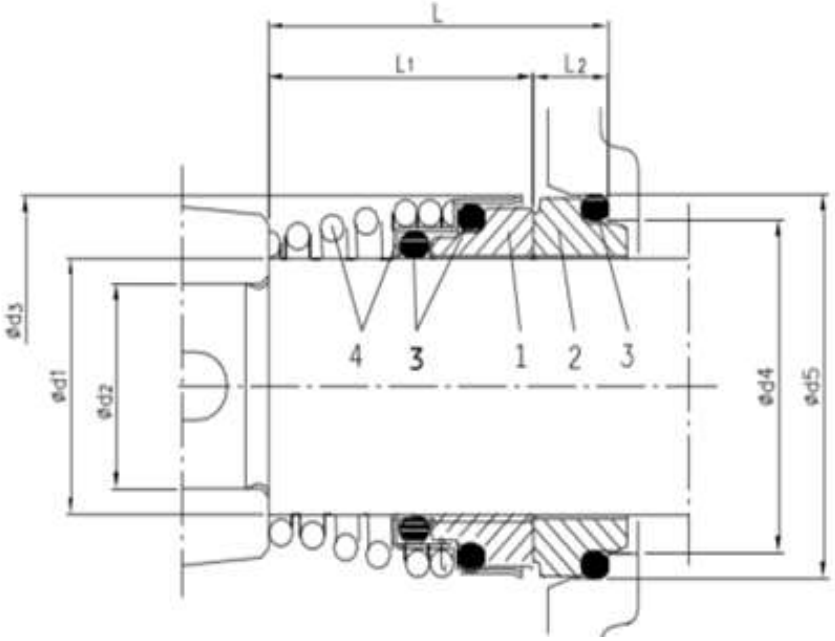

Version	Pump type	Dimensions [mm]								Material			
		d1	d2	d3	d4	d5	L	L1	L2	1.Rotary seal ring	2.Stationary seal ring	3.Rubber	4.Frame + Spring
Standard (Q1AEGG)	32-125 50-100 65-100/0.55-0.75	15	12	26	21	26.9	29	22	7	Silicon Carbide	Metarialised Carbon	EPDM	EN 1.4401 (AISI 316)
	40-160/200 50-125/160/200 65-100/1.1-1.5 65-125/160/200 80-100 80-160/9.2-11	22	19	36	31	37	37.5	27.5	10				
	80-160/15 80-200 100-160	30	24	46	39	45	42.5	32.5	10				
Option 1 (Q4Q1EGG)	32-125 50-100 65-100/0.55-0.75	15	12	26	21	26.9	29	22	7	Silicon Carbide graphite	Silicon Carbide	EPDM	EN 1.4401 (AISI 316)
	40-160/200 50-125/160/200 65-100/1.1-1.5 65-125/160/200 80-100 80-160/9.2-11	22	19	36	31	37	37.5	27.5	10				
	80-160/15 80-200 100-160	30	24	46	39	45	42.5	32.5	10				

* The drawing is only indicative

MECHANICAL SEAL (Standard and Special version) 3E 3ES 2 POLE

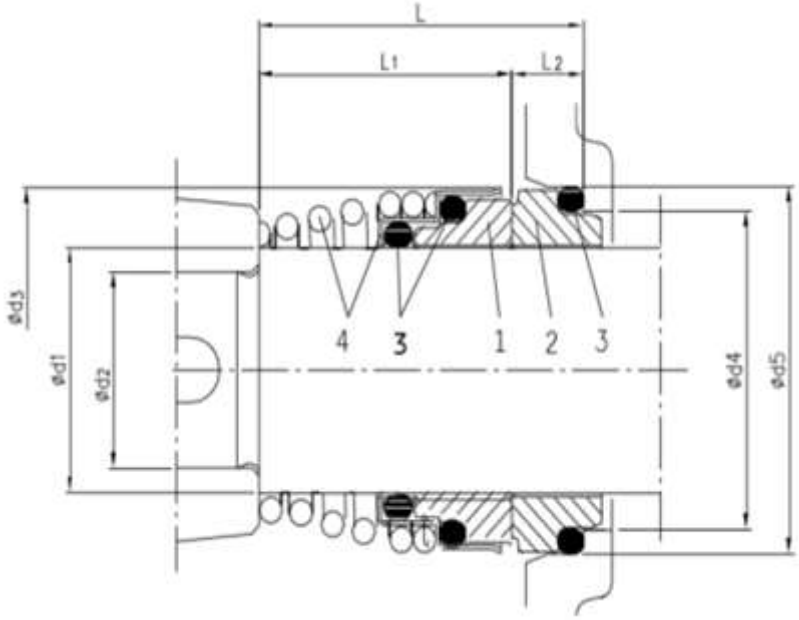

Version	Pump type	Dimensions [mm]								Material			
		d1	d2	d3	d4	d5	L	L1	L2	1 Rotary seal ring	2 Stationary seal ring	3 Rubber	4 Frame + Spring
Option 2 (Q4Q1VGG)	32-125 50-100 65-100/0.55-0.75	15	12	26	21	26.9	29	22	7	Silicon Carbide graphite	Silicon Carbide	Viton	EN 1.4401 (AISI 316)
	40-160/200 50-125/160/200 65-100/1.1-1.5 65-200 80-100 80-160/9.2-11	22	19	36	31	37	37.5	27.5	10				
	80-160/15 80-200 100-160	30	24	46	39	45	42.5	32.5	10				
Option 3 (Q1AVGG)	32-125 50-100 65-100/0.55-0.75	15	12	26	21	26.9	29	22	7	Silicon Carbide	Carbon (Metal)	Viton	EN 1.4401 (AISI 316)
	40-160/200 50-125/160/200 65-100/1.1-1.5 65-200 80-100 80-160/9.2-11	22	19	36	31	37	37.5	27.5	10				
	80-160/15 80-200 100-160	30	24	46	39	45	42.5	32.5	10				

*The drawing is only indicative

MECHANICAL SEAL (Standard and Special version) 3E 3ES 4 POLE

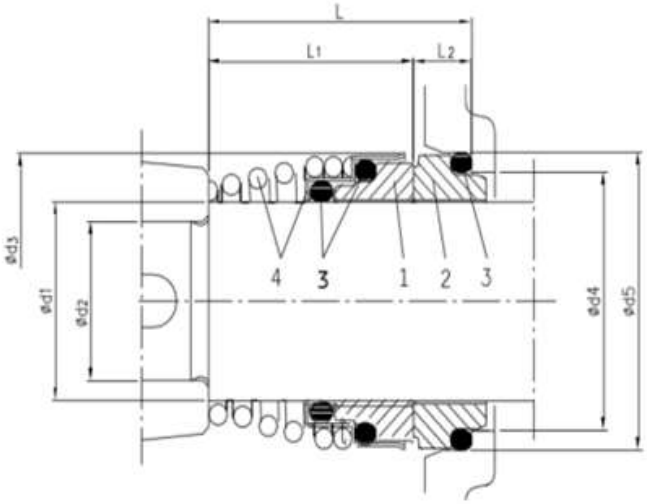

Version	Pump type	Dimensions [mm]								Material			
		d1	d2	d3	d4	d5	L	L1	L2	1 Rotary seal ring	2 Stationary seal ring	3 Rubber	4 Frame + Spring
Standard (Q1AEGG)	32-160/200 40-160/200 50-125/160/200 65-125/160/200 80-160/200 100-160	22	19	36	31	37	37.5	27.5	10	Silicon Carbide	Metallised Carbon	EPDM	EN 1.4401 (AISI 316)
Option 1 (Q4Q1EGG)	32-160/200 40-160/200 50-125/160/200 65-125/160/200 80-160/200 100-160	22	19	36	31	37	37.5	27.5	10	Silicon Carbide graphite	Silicon Carbide	EPDM	EN 1.4401 (AISI 316)
Option 2 (Q4Q1VGG)	32-160/200 40-160/200 50-125/160/200 65-125/160/200 80-160/200 100-160	22	19	36	31	37	37.5	27.5	10	Silicon Carbide graphite	Silicon Carbide	Viton	EN 1.4401 (AISI 316)
Option 3 (Q1AVGG)	32-160/200 40-160/200 50-125/160/200 65-125/160/200 80-160/200 100-160	22	19	36	31	37	37.5	27.5	10	Silicon Carbide	Carbon (Metal)	Viton	EN 1.4401 (AISI 316)

* The drawing is only indicative

COUPLING 3ES 2 POLE

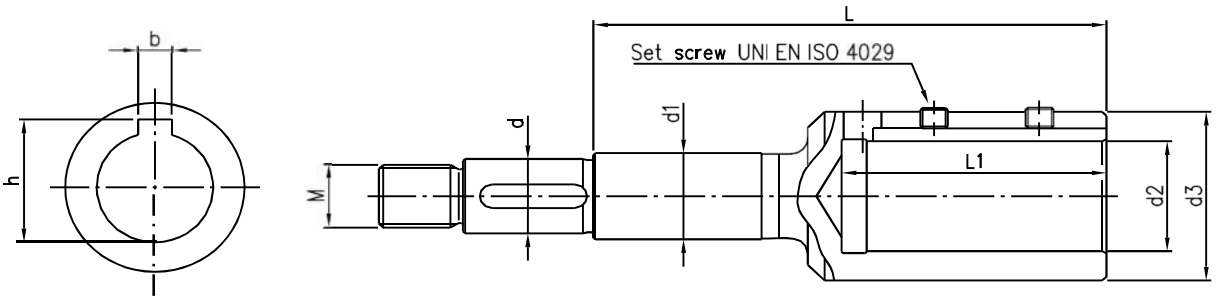

Pump type	Power [kW]	Power [HP]	Motor Size	Dimensions mm d	d1	d2	d3	M	L	L1	b	h	Set screw
32-125/0.75	0.75	1	80	12	15	19	33	M10x1.25	102.5	43	6	21.8	M6x6
40-160/1.5	1.5	2	90	19	22	24	39	M16x1.5	110	53	8	27.3	M8x8
40-160/2.2	2.2	3	90	19	22	24	39	M16x1.5	110	53	8	27.3	M8x8
40-200/3.0	3	4	100	19	22	28	43	M16x1.5	122	63	8	31.3	M8x8
40-200/4.0	4	5.5	112	19	22	28	43	M16x1.5	122	63	8	31.3	M8x8
40-200/7.5	7.5	10	132	19	22	38	58	M16x1.5	145	84	10	41.3	M8x8
50-100/0.75	0.75	1	80	12	15	19	33	M10x1.25	102.5	43	6	21.8	M6x6
50-125/1.5	1.5	2	90	19	22	24	39	M16x1.5	110	53	8	27.3	M8x8
50-125/2.2	2.2	3	90	19	22	24	39	M16x1.5	110	53	8	27.3	M8x8
50-160/3.0	3	4	100	19	22	28	43	M16x1.5	122	63	8	31.3	M8x8
50-160/4.0	4	5.5	112	19	22	28	43	M16x1.5	122	63	8	31.3	M8x8
50-200/5.5	5.5	7.5	132	19	22	38	58	M16x1.5	145	84	10	41.3	M8x8
50-200/7.5	7.5	10	132	19	22	38	58	M16x1.5	145	84	10	41.3	M8x8
50-200/11	11	15	160	19	22	42	63	M16x1.5	178	114	12	45.3	M8x8
65-100/0.75	0.75	1	80	12	15	19	33	M10x1.25	102.5	43	6	21.8	M6x6
65-100/1.1	1.1	2	80	12	15	19	33	M10x1.25	102.5	43	6	21.8	M6x6
65-100/1.5	1.5	2	90	12	15	19	33	M10x1.25	102.5	43	6	21.8	M6x6
65-125/2.2	2.2	3	90	19	22	24	39	M16x1.5	110	53	8	27.3	M8x8
65-125/3.0	3	4	100	19	22	28	43	M16x1.5	122	63	8	31.3	M8x8
65-125/4.0	4	5.5	112	19	22	28	43	M16x1.5	122	63	8	31.3	M8x8
65-160/5.5	5.5	7.5	132	19	22	38	58	M16x1.5	145	84	10	41.3	M8x8
65-160/7.5	7.5	10	132	19	22	38	58	M16x1.5	145	84	10	41.3	M8x8
65-200/9.2	9.2	12.5	132	19	22	38	58	M16x1.5	145	84	10	41.3	M8x8
65-200/11	11	15	160	19	22	42	63	M16x1.5	178	114	12	45.3	M8x8
65-200/15	15	20	160	22	22	42	63	M18x1.5	209	114	12	45.3	M8x8
80-100/1.5	1.5	2	90	19	22	24	39	M16x1.5	110	53	8	27.3	M8x8
80-100/2.2	2.2	3	90	19	22	24	39	M16x1.5	110	53	8	27.3	M8x8
80-160/9.2	9.2	12.5	132	19	22	38	58	M16x1.5	145	84	10	41.3	M8x8
80-160/11	11	15	160	19	22	42	63	M16x1.5	178	114	12	45.3	M8x8
80-160/15	15	20	160	24	30	42	63	M20x1.5	184	114	12	45.3	M8x8
80-200/18.5	18.5	25	160	24	30	42	63	M20x1.5	184	114	12	45.3	M8x8
80-200/22	22	30	180	24	30	48	72	M20x1.5	184	114	14	51.8	M10x10
100-160/11	11	15	160	24	30	42	63	M20x1.5	184	114	12	45.3	M8x8
100-160/15	15	20	160	24	30	42	63	M20x1.5	184	114	12	45.3	M8x8
100-160/18.5	18.5	25	160	24	30	42	63	M20x1.5	184	114	12	45.3	M8x8

COUPLING 3ES 4 POLE

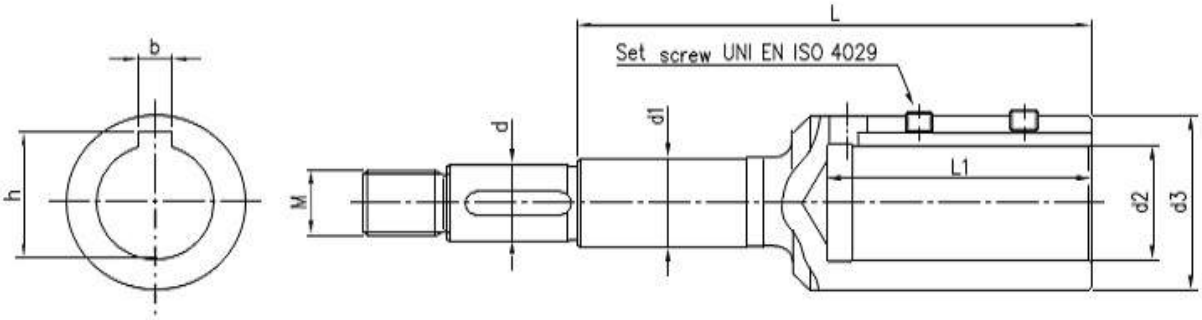

Pump type	Power		Motor Size	Dimensions mm									
	[kW]	[kW]		d	d1	d2	d3	M	L	L1	b	h	Set screw
32-200/0.55	0.55	0.75	80	19	22	19	33	M16x1.5	98	43	6	21.8	M6x6
40-200/0.55	0.55	0.75	80	19	22	19	33	M16x1.5	98	43	6	21.8	M6x6
40-200/0.75	0.75	1	80	19	22	19	33	M16x1.5	98	43	6	21.8	M6x6
50-160/0.55	0.55	0.75	80	19	22	19	33	M16x1.5	98	43	6	21.8	M6x6
50-200/0.75	0.75	1.5	80	19	22	19	33	M16x1.5	98	43	6	21.8	M6x6
50-200/1.1	1.1	1.5	90	19	22	24	39	M16x1.5	110	53	8	27.3	M8x8
50-200/1.5	1.5	2	90	19	22	24	39	M16x1.5	110	53	8	27.3	M8x8
65-125/0.55	0.55	0.75	80	19	22	19	33	M16x1.5	98	43	6	21.8	M6x6
65-160/0.75	0.75	1.5	80	19	22	19	33	M16x1.5	98	43	6	21.8	M6x6
65-160/1.1	1.1	1.5	90	19	22	24	39	M16x1.5	110	53	8	27.3	M8x8
65-200/1.5	1.5	2	90	19	22	24	39	M16x1.5	110	53	8	27.3	M8x8
65-200/2.2	2.2	3	100	22	22	28	43	M18x1.5	153	63	8	31.3	M8x8
80-160/1.5	1.5	2	90	19	22	24	39	M16x1.5	110	53	8	27.3	M8x8
80-200/2.2	2.2	3	100	19	22	28	43	M16x1.5	122	63	8	31.3	M8x8
80-200/3	3	4	100	19	22	28	43	M16x1.5	122	63	8	31.3	M8x8
100-160/1.5	1.5	2	90	19	22	24	39	M16x1.5	110	53	8	27.3	M8x8
100-160/2.2	2.2	3	100	19	22	28	43	M16x1.5	122	63	8	31.3	M8x8

BASE PLATE

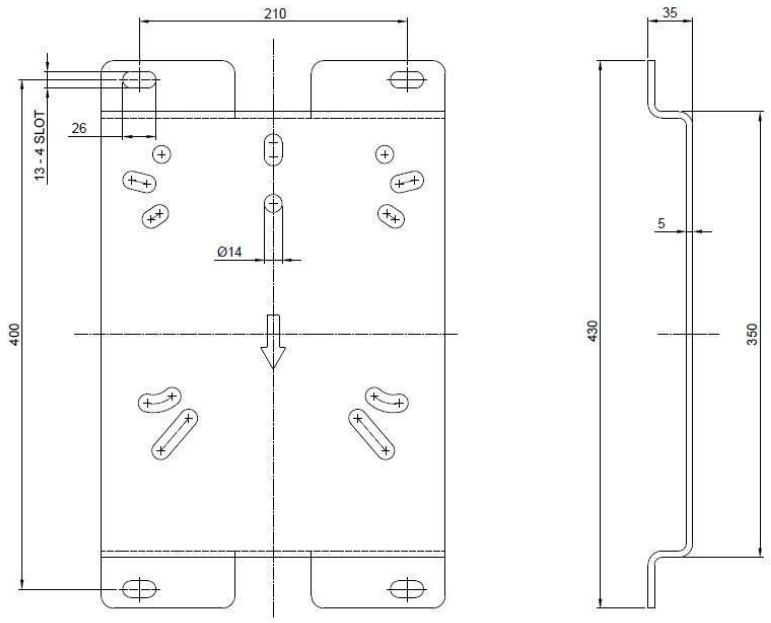

*Pump Models	Hexagon head screws
50-200 65-200	3XM12
80-160,80-200, 100-160	4XM12

*Note: Baseplates are supplied as standard for 11kW motors and above

COUNTER FLANGE

Counter flange	Pump type	Rated Pressure (PN)	Dimension (mm) Counterflange DN	D	D2	E	F	H	H1	L1	L2	SN	Bolt Dimension	Material
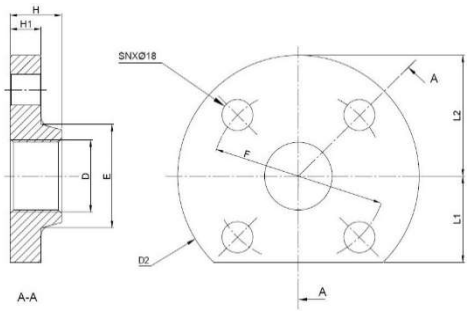	32-125 32-160 32-200 40-200 50-125 50-160 65-125 65-160 80-100	16	32	Rp 1"1/4	140	60	100	30	18	50	70	4	M16X55	A2-70 ISO 3506-1
		16	40	Rp 1"1/2	150	70	110	32	18	55	75	4		
		16	50	Rp 2"	165	84	125	28	18	62.5	82.5	4		
		16	65	Rp 2"1/2	185	104	145	32	18	72.5	92.5	4		
		16	80	Rp 3"	200	118	160	34	20	95	100	8	M16X60	
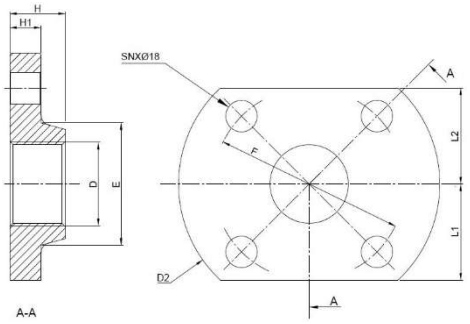	40-160 50-100 50-200 65-100 65-200	16	40	Rp 1"1/2	150	70	110	32	18	55	55	4	M16X55	
		16	50	Rp 2"	165	84	125	28	18	62.5	62.5	4		
		16	65	Rp 2"1/2	185	104	145	32	18	72.5	72.5	4		
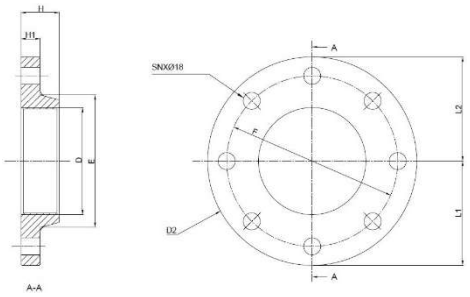	80-160 80-200 100-160	16	80	Rp 3"	200	118	160	34	20	100	100	8	M16X60	
		16	100	Rp 4"	220	140	180	40	20	110	110	8		

GASKET EPDM

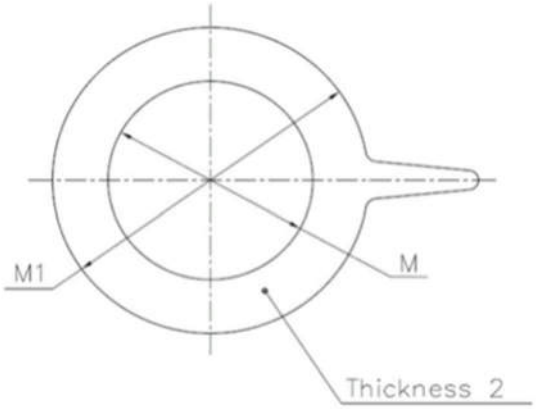

Dimensions [mm]

DN	M	M1
32	38	82
40	50	93
50	60	107
65	80	125
80	90	140
100	115	160

DIMENSIONS & WEIGHT 3E 2 POLE

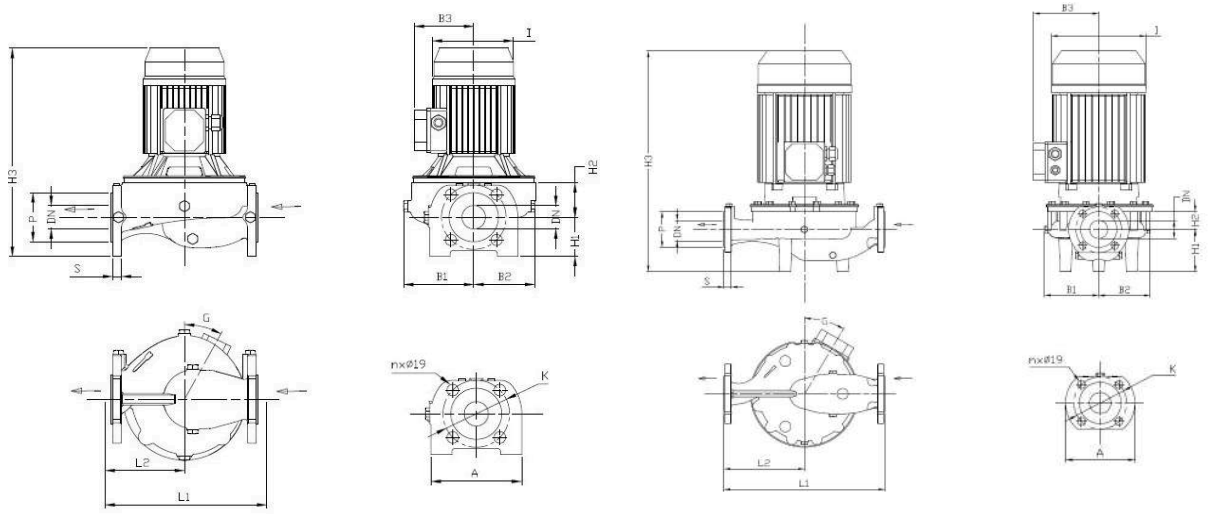

Model	Dimensions [mm]																Weight [kgf]
	Ø DN	Ø P	Ø K	S	L1	L2	H1	H2	H3	B1	B2	B3	G	I	n	A	
32-125/0.37	32	76	100	18	280	140	79	38	347	115	103	102	0	141	4	140	18
32-125/0.55	32	76	100	18	280	140	79	38	347	115	103	102	0	141	4	140	23.5
32-125/0.75	32	76	100	18	280	140	79	38	347	115	103	101	0	140	4	140	20
40-160/1.1	40	84	110	18	320	160	68	50	395	127	127	124	19	176	4	150	30
40-160/1.5	40	84	110	18	320	160	68	50	395	127	127	124	17	176	4	150	30
40-160/2.2	40	84	110	18	320	160	68	50	420	127	127	124	18	176	4	150	31
40-200/3.0	40	84	110	18	340	170	100	50	490	146	146	124	15	176	4	150	47
40-200/4.0	40	84	110	18	340	170	100	50	513	146	146	141	15	193	4	150	47.7
40-200/7.5	40	84	110	18	340	170	100	50	558	146	146	150	15	220	4	150	64.5
50-100/0.37	50	99	125	20	280	140	75	47	352	125	108	102	0	141	4	165	21.2
50-100/0.55	50	99	125	20	280	140	75	47	352	125	108	102	0	141	4	165	24
50-100/0.75	50	99	125	20	280	140	75	47	352	125	108	101	0	140	4	165	22.7
50-125/1.5	50	99	125	20	340	170	115	40	441	124	105	124	0	176	4	165	30
50-125/2.2	50	99	125	20	340	170	115	40	466	124	105	124	0	176	4	165	32
50-160/3.0	50	99	125	20	340	170	115	50	505	134	126	124	18	176	4	165	40.2
50-160/4.0	50	99	125	20	340	170	115	50	528	134	126	141	18	193	4	165	48
50-200/5.5	50	99	125	20	440	220	115	50	553	148	141	150	0	220	4	165	60.5
50-200/7.5	50	99	125	20	440	220	115	50	574	148	141	150	0	220	4	165	67
50-200/11	50	99	125	20	440	170	115	50	609	148	141	178	0	259	4	165	79.3
65-100/0.55	65	118	145	20	340	170	82	40	353	115	100	102	0	141	4	185	22.4
65-100/0.75	65	118	145	20	340	170	82	40	352	115	100	101	0	140	4	185	23.5
65-100/1.1	65	118	145	20	340	170	82	40	408	115	100	124	0	176	4	185	29.5
65-100/1.5	65	118	145	20	340	170	82	40	408	115	100	124	0	176	4	185	31
65-125/2.2	65	118	145	20	360	180	105	50	456	136	126	124	18	176	4	185	34.5
65-125/3.0	65	118	145	20	360	180	105	50	495	136	126	124	18	176	4	185	37.8
65-125/4.0	65	118	145	20	360	180	105	50	518	136	126	141	18	193	4	185	51.5
65-160/5.5	65	118	145	20	360	180	105	50	543	141	141	150	0	220	4	185	62
65-160/7.5	65	118	145	20	360	180	105	50	563	141	141	150	0	220	4	185	68
65-200/9.2	65	118	145	20	475	237.5	125	50	620	151	141	178	0	259	4	185	81.8
65-200/11	65	118	145	20	475	237.5	125	50	619	151	141	178	0	259	4	185	91
65-200/15	65	118	145	20	475	237.5	125	50	747	151	141	223	0	309	4	185	127
80-100/1.5	80	132	160	22	360	175	97	48	431	134	108	124	0	176	8	200	37
80-100/2.2	80	132	160	22	360	175	97	48	457	134	108	124	0	176	8	200	38
80-160/9.2	80	132	160	22	440	220	115	50	609	146	141	178	0	259	8	200	95
80-160/11	80	132	160	22	440	220	115	50	609	146	141	178	0	259	8	200	97
80-160/15	80	132	160	22	440	220	115	50	746	146	141	223	0	309	8	200	130.3
80-200/18.5	80	132	160	22	500	250	115	50	746	160	141	223	0	309	8	200	148.1
80-200/22	80	132	160	22	500	250	115	50	746	160	141	223	0	309	8	200	159.9
100-160/11	100	156	180	24	550	275	140	64	636	173	141	178	0	259	8	230	119
100-160/15	100	156	180	24	550	275	140	64	786	173	141	223	0	309	8	230	130.0
100-160/18.5	100	156	180	24	550	275	140	64	786	173	141	223	0	309	8	230	144.2

DIMENSIONS & WEIGHT 3E 4 POLE

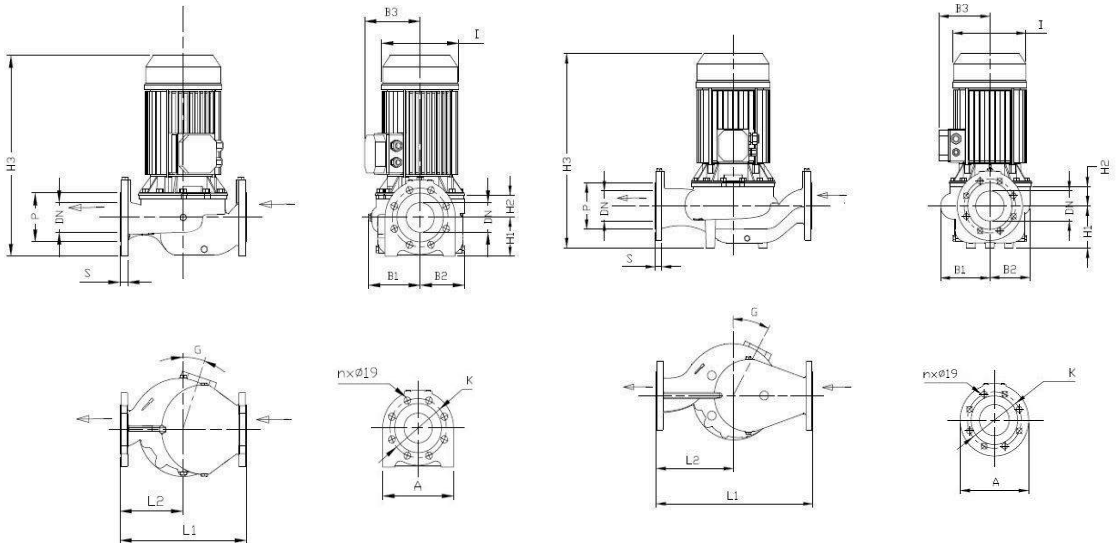

Model	Dimensions [mm]																Weight [kgf]
	Ø DN	Ø P	Ø K	S	L1	L2	H1	H2	H3	B1	B2	B3	G	I	n	A	
32-160/0.37R	32	76	100	18	340	170	100	50	412	125	125	119	18	159	4	140	32
32-160/0.37	32	76	100	18	340	170	100	50	412	125	125	119	18	159	4	140	32
32-200/0.55	32	76	100	18	440	220	100	50	412	144	140	119	0	159	4	140	30.9
40-160/0.37R	40	84	110	18	320	160	68	50	379	127	127	119	18	159	4	150	32
40-160/0.37	40	84	110	18	320	160	68	50	379	127	127	119	18	159	4	150	32
40-200/0.55	40	84	110	18	340	170	100	50	412	146	146	119	15	159	4	150	37
40-200/0.75	40	84	110	18	340	170	100	50	452	146	146	124	15	176	4	150	43
50-125/0.37	50	99	125	20	340	170	115	40	406	124	105	102	0	141	4	165	28
50-160/0.55	50	99	125	20	340	170	115	50	428	134	126	119	18	159	4	165	35
50-200/0.75	50	99	125	20	440	220	115	50	467	148	141	124	0	176	4	165	47
50-200/1.1	50	99	125	20	440	220	115	50	467	148	141	124	0	176	4	165	47
50-200/1.5	50	99	125	20	440	220	115	50	499	148	141	141	0	193	4	165	39.9
65-125/0.55	65	118	145	20	360	180	105	50	418	136	126	119	18	159	4	185	38
65-160/0.75	65	118	145	20	360	180	105	50	457	141	141	124	0	176	4	185	47.5
65-160/1.1	65	118	145	20	360	180	105	50	457	141	141	124	0	176	4	185	47.4
65-200/1.5	65	118	145	20	475	237.5	125	50	509	151	141	141	0	193	4	185	43.9
65-200/2.2	65	118	145	20	475	237.5	125	50	546	151	141	141	0	193	4	185	42.3
80-160/1.5	80	132	160	22	440	220	115	50	499	146	141	141	0	193	8	200	47.3
80-200/2.2	80	132	160	22	500	250	115	50	536	160	141	141	0	193	8	200	59
80-200/3.0	80	132	160	22	500	250	115	50	529	160	141	141	0	193	8	200	64
100-160/1.5	100	156	180	24	550	275	140	64	538	173	141	141	0	193	8	230	73
100-160/2.2	100	156	180	24	550	275	140	64	575	173	141	141	0	193	8	230	51.9

DIMENSIONS & WEIGHT 3ES 2 POLE

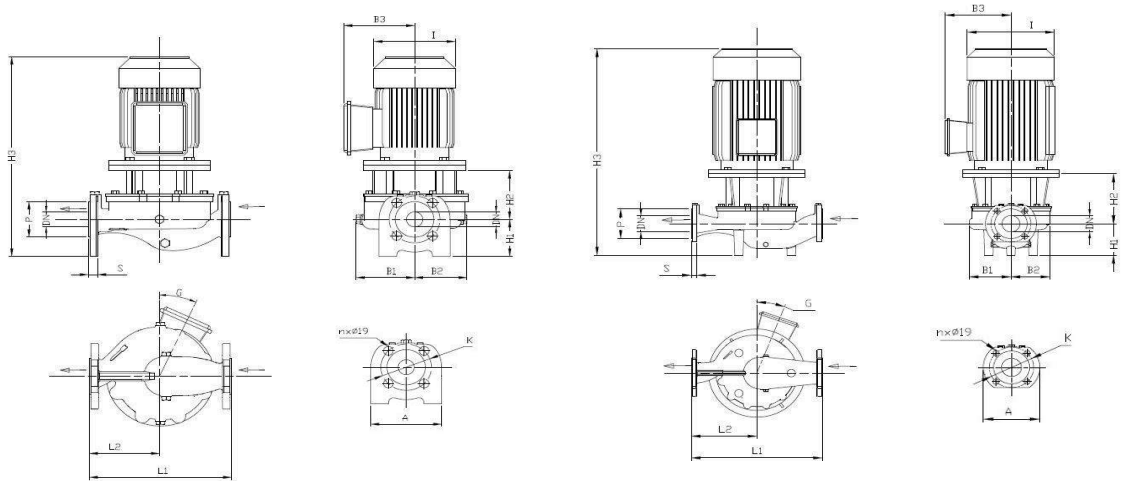

Model	Dimensions [mm]																Weight [kgf]
	Ø DN	Ø P	Ø K	S	L1	L2	H1	H2	H3	B1	B2	B3	G	I	n	A	
32-125/0.75	32	76	100	18	280	140	79	116	427	115	103	139	0	160	4	140	27.8
40-160/1.5	40	84	110	18	320	160	68	130	465	127	127	148	18	180	4	150	37.4
40-160/2.2	40	84	110	18	320	160	68	130	465	127	127	148	18	180	4	150	36.6
40-200/3.0	40	84	110	18	340	170	100	142	548	146	146	155	15	196	4	150	53.6
40-200/4.0	40	84	110	18	340	170	100	142	570	146	146	171	15	225	4	150	55.1
40-200/7.5	40	84	110	18	340	170	100	165	650	146	146	194	14	248	4	150	86.3
50-100/0.75	50	99	125	20	280	140	75	125	432	125	108	139	0	160	4	165	27.8
50-125/1.5	50	99	125	20	340	170	115	130	512	124	105	148	0	180	4	165	37.0
50-125/2.2	50	99	125	20	340	170	115	130	512	124	105	148	0	180	4	165	38.8
50-160/3.0	50	99	125	20	340	170	115	142	563	134	126	155	18	196	4	165	62.4
50-160/4.0	50	99	125	20	340	170	115	257	585	134	126	171	18	225	4	165	48.6
50-200/5.5	50	99	125	20	440	220	115	165	642	148	141	198	0	248	4	165	127.7
50-200/7.5	50	99	125	20	440	220	115	165	642	148	141	198	0	248	4	165	76.6
50-200/11	50	99	125	20	440	220	115	198	811	148	141	238	0	317	4	165	127.7
65-100/0.75	65	118	145	20	340	170	82	118	432	115	100	139	0	160	4	185	32.0
65-100/1.1	65	118	145	20	340	170	82	118	432	115	100	139	0	160	4	185	34.0
65-100/1.5	65	118	145	20	340	170	82	130	479	115	100	148	0	180	4	185	30.6
65-125/2.2	65	118	145	20	360	180	105	130	502	136	126	148	18	180	4	185	36.2
65-125/3.0	65	118	145	20	360	180	105	142	553	136	126	155	18	196	4	185	42.4
65-125/4.0	65	118	145	20	360	180	105	142	575	136	126	171	18	225	4	185	51.0
65-160/5.5	65	118	145	20	360	180	105	165	632	141	141	198	0	248	4	185	75.3
65-160/7.5	65	118	145	20	360	180	105	165	632	141	141	198	0	248	4	185	97.5
65-200/9.2	65	118	145	20	475	237.5	125	165	692	151	141	198	0	248	4	185	130.2
65-200/11	65	118	145	20	475	237.5	125	198	821	151	141	238	0	317	4	185	130.2
65-200/15	65	118	145	20	475	237.5	125	198	821	151	141	238	0	317	4	185	166.3
80-100/1.5	80	132	160	22	360	175	97	138	502	134	108	148	0	180	8	200	36.4
80-100/2.2	80	132	160	22	360	175	97	138	502	134	108	148	0	180	8	200	40.0
80-160/9.2	80	132	160	22	440	220	115	165	682	146	141	198	0	248	8	200	109.2
80-160/11	80	132	160	22	440	220	115	198	811	146	141	238	0	317	8	200	108.0
80-160/15	80	132	160	22	440	220	115	208	821	146	141	238	0	317	8	200	144.1
80-200/18.5	80	132	160	22	500	250	115	208	865	160	141	238	0	317	8	200	160.3
80-200/22	80	132	160	22	500	250	115	208	900	160	141	268	0	360	8	200	198.8
100-160/11	100	156	180	24	550	275	140	222	860	173	141	238	0	317	8	230	144.7
100-160/15	100	156	180	24	550	275	140	222	860	173	141	238	0	317	8	230	155.9
100-160/18.5	100	156	180	24	550	275	140	222	904	173	141	238	0	317	8	230	150.1

DIMENSIONS & WEIGHT 3ES 4 POLE

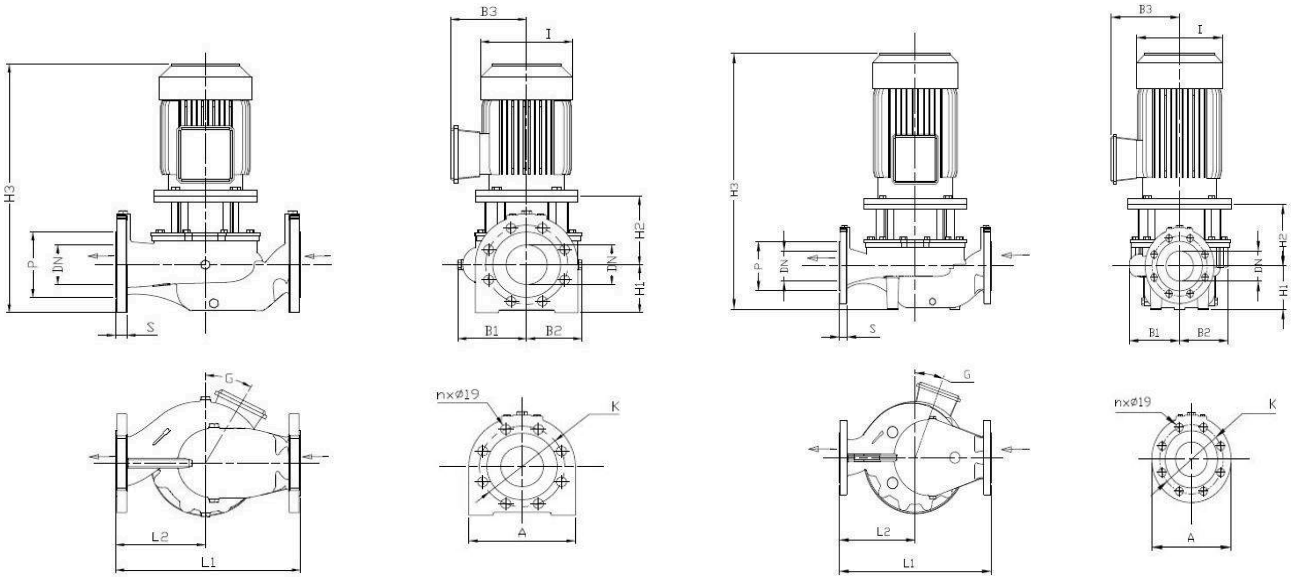

Model	Dimensions [mm]																Weight [kgf]
	Ø DN	Ø P	Ø K	S	L1	L2	H1	H2	H3	B1	B2	B3	G	I	n	A	
32-200/0.55	32	76	100	18	440	220	100	118	450	144	140	139	0	160	4	140	39.4
40-200/0.55	40	84	110	18	340	170	100	118	450	146	146	139	14	160	4	150	38.7
40-200/0.75	40	84	110	18	340	170	100	118	450	146	146	139	15	160	4	150	35.2
50-160/0.55	50	99	125	20	340	170	115	118	465	134	126	139	18	160	4	165	32.4
50-200/0.75	50	99	125	20	440	220	115	118	465	148	141	139	0	160	4	165	38.7
50-200/1.1	50	99	125	20	440	220	115	130	512	148	141	148	0	180	4	165	46.1
50-200/1.5	50	99	125	20	440	220	115	130	512	148	141	148	0	180	4	165	47.7
65-125/0.55	65	118	145	20	360	180	105	118	455	136	126	139	18	160	4	185	34.3
65-160/0.75	65	118	145	20	360	180	105	118	455	141	141	139	0	160	4	185	38.9
65-160/1.1	65	118	145	20	360	180	105	130	502	141	141	148	0	180	4	185	47.8
65-200/1.5	65	118	145	20	475	237.5	125	130	522	151	141	148	0	180	4	185	52.0
65-200/2.2	65	118	145	20	475	237.5	125	142	573	151	141	155	0	196	4	185	55.7
80-160/1.5	80	132	160	22	440	220	115	130	512	146	141	148	0	180	8	200	62.9
80-200/2.2	80	132	160	22	500	250	115	142	563	160	141	155	0	196	8	200	65.1
80-200/3.0	80	132	160	22	500	250	115	142	563	160	141	155	0	196	8	200	66.8
100-160/1.5	100	156	180	24	550	275	140	144	551	173	141	148	0	177	8	230	76.3
100-160/2.2	100	156	180	24	550	275	140	156	602	173	141	155	0	196	8	230	99.8

PACKING 3E - 2POLE

Pump Type	Packing [mm]			Total net weight (kg)
	Z	X	Y	
3E 32-125/0.37	450	390	610	24
3E 32-125/0.55	450	390	610	26.2
3E 32-125/0.75	450	390	610	26
3E 40-160/1.1	450	390	610	35
3E 40-160/1.5	450	390	610	35
3E 40-160/2.2	450	390	610	37
3E 40-200/3.0	450	390	700	53
3E 40-200/4.0	450	390	700	53.7
3E 40-200/7.5	450	390	700	69.5
3E 50-100/0.37	450	390	610	27
3E 50-100/0.55	450	390	610	29
3E 50-100/0.75	450	390	610	28.7
3E 50-125/1.5	450	390	610	35
3E 50-125/2.2	450	390	610	38
3E 50-160/3.0	450	390	700	45.2
3E 50-160/4.0	450	390	700	53
3E 50-200/5.5	640	530	785	70.7
3E 50-200/7.5	640	530	785	77
3E 50-200/11	640	530	785	89.3
3E 65-100/0.55	450	390	610	27.5
3E 65-100/0.75	450	390	610	29.5
3E 65-100/1.1	450	390	610	35.2
3E 65-100/1.5	450	390	610	36
3E 65-125/2.2	450	390	610	39.5
3E 65-125/3.0	450	390	700	42.9
3E 65-125/4.0	450	390	700	56.5
3E 65-160/5.5	450	390	700	67
3E 65-160/7.5	450	390	700	73
3E 65-200/9.2	640	530	785	91.8
3E 65-200/11	640	530	1045	102
3E 65-200/15	640	530	1045	137
3E 80-100/1.5	450	390	610	42
3E 80-100/2.2	450	390	610	44
3E 80-160/9.2	640	530	785	103
3E 80-160/11	640	530	785	106
3E 80-160/15	640	530	1045	140.3
3E 80-200/18.5	640	530	1045	158.1
3E 80-200/22	640	530	1045	169.9
3E 100-160/11	640	530	1045	129
3E 100-160/15	640	530	1045	140
3E 100-160/18.5	640	530	1045	154.2

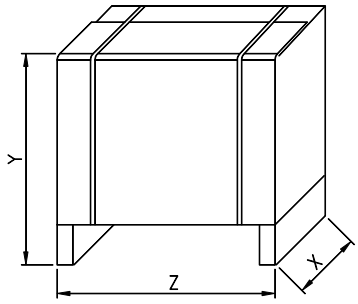

PACKING 3E - 4POLE

Pump Type	Packing [mm]			Total net weight (kg)
	Z	X	Y	
3E4 32-160/0.37	450	390	610	37
3E4 32-160/0.37R	450	390	610	37
3E4 32-200/0.55	640	530	785	40.9
3E4 40-160/0.37	450	390	610	37
3E4 40-160/0.37R	450	390	610	37
3E4 40-200/0.55	450	390	610	42
3E4 40-200/0.75	450	390	610	48
3E4 50-125/0.37	450	390	610	33
3E4 50-160/0.55	450	390	610	40
3E4 50-200/0.75	640	530	785	57
3E4 50-200/1.1	640	530	785	56
3E4 50-200/1.5	640	530	785	49.9
3E4 65-125/0.55	450	390	610	43
3E4 65-160/0.75	450	390	610	52.5
3E4 65-160/1.1	450	390	610	52.4
3E4 65-200/1.5	640	530	785	53.9
3E4 65-200/2.2	640	530	785	52.3
3E4 80-160/1.5	640	530	785	57.3
3E4 80-200/2.2	640	530	785	69
3E4 80-200/3.0	640	530	785	73
3E4 100-160/1.5	640	530	785	82
3E4 100-160/2.2	640	530	785	61.9

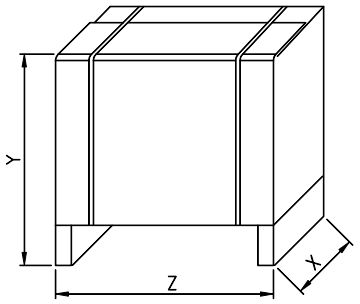

PACKING 3ES - 2POLE

Pump Type	Packing [mm]			Total net weight (kg)
	Z	X	Y	
3ES 32-125/0.75	450	390	610	32.9
3ES 40-160/1.5	450	390	610	42.4
3ES 40-160/2.2	450	390	610	41.7
3ES 40-200/3.0	450	390	700	58.7
3ES 40-200/4.0	640	530	785	65.1
3ES 40-200/7.5	640	530	785	96.3
3ES 50-100/0.75	450	390	610	32.9
3ES 50-125/1.5	450	390	700	42
3ES 50-125/2.2	450	390	700	43.9
3ES 50-160/3.0	450	390	700	67.5
3ES 50-160/4.0	640	530	785	58.6
3ES 50-200/5.5	640	530	785	137.7
3ES 50-200/7.5	640	530	785	86.6
3ES 50-200/11	640	530	1045	137.7
3ES 65-100/0.75	450	390	610	37.1
3ES 65-100/1.1	450	390	610	39
3ES 65-100/1.5	450	390	610	35.7
3ES 65-125/2.2	450	390	700	41.3
3ES 65-125/3.0	450	390	700	47.5
3ES 65-125/4.0	640	530	785	61
3ES 65-160/5.5	640	530	785	85.3
3ES 65-160/7.5	640	530	785	107.5
3ES 65-200/9.2	640	530	1045	140.2
3ES 65-200/11	640	530	1045	140.2
3ES 65-200/15	640	530	1045	176.3
3ES 80-100/1.5	450	390	700	41.5
3ES 80-100/2.2	450	390	700	45.1
3ES 80-160/9.2	640	530	1045	119.2
3ES 80-160/11	640	530	1045	118
3ES 80-160/15	640	530	1045	154.1
3ES 80-200/18.5	640	530	1045	170.3
3ES 80-200/22	760	610	1280	214.6
3ES 100-160/11	640	530	1045	154.7
3ES 100-160/15	640	530	1045	165.9
3ES 100-160/18.5	760	610	1280	165.9

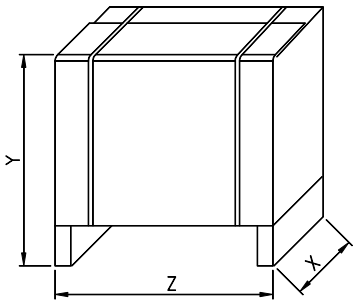

PACKING 3ES - 4POLE

Pump Type	Packing [mm]			Total net weight (kg)
	Z	X	Y	
3ES4 32-200/0.55	640	539	785	49.4
3ES4 40-200/0.55	450	390	610	43.8
3ES4 40-200/0.75	450	390	610	40.3
3ES4 50-160/0.55	450	390	610	37.5
3ES4 50-200/0.75	640	530	785	48.7
3ES4 50-200/1.1	640	530	785	56.1
3ES4 50-200/1.5	640	530	785	57.7
3ES4 65-125/0.55	450	390	610	39.4
3ES4 65-160/0.75	450	390	610	44
3ES4 65-160/1.1	450	390	700	52.9
3ES4 65-200/1.5	640	530	785	62
3ES4 65-200/2.2	640	530	785	65.7
3ES4 80-160/1.5	640	530	785	72.9
3ES4 80-200/2.2	640	530	785	75.1
3ES4 80-200/3.0	640	530	785	76.8
3ES4 100-160/1.5	640	530	785	86.3
3ES4 100-160/2.2	640	530	785	109.8

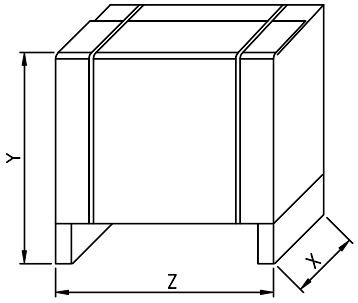

MOTOR DATA 3E 2 POLE

Pump type	Motor Power [kW]	Motor Power [HP]	Efficiency	Input [kW]	Efficiency (% load) 50%	75%	100%	Full load current [A] 230 V	400 V	690 V	Locked rotor current [A] 230 V	400 V	690 V
3E 32-125/0.37	0.37	0.5		0.71	75.1	78.5	78	2.4	1.4	-	12.7	7.30	-
3E 32-125/0.55	0.55	0.75		0.91	80.2	82.8	82.9	3.0	1.7	-	20.5	11.8	-
3E 32-125/0.75	0.75	1		1.05	80.9	82.3	82.1	3.3	1.9	-	19.7	11.4	-
3E 40-160/1.1	1.1	1.5		1.77	83.5	84.3	84.6	5.8	3.3	-	47.4	27.4	-
3E 40-160/1.5	1.5	2		1.77	83.5	84.3	84.6	5.8	3.3	-	47.4	27.4	-
3E 40-160/2.2	2.2	3		2.55	86.2	87.0	86.0	8.2	4.7	-	66.6	38.4	-
3E 40-200/3.0	3	4		3.44	85.9	87.5	87.1	11.1	6.4	-	90.0	52.0	-
3E 40-200/4.0	4	5.5		4.52	85.8	88.3	88.4	15.1	8.7	-	131.8	76.1	-
3E 40-200/7.5	7.5	10		8.26	89	90.7	90.8	-	13.6	7.9	-	144.0	83.0
3E 50-100/0.37	0.37	0.5		0.71	75.1	78.5	78	2.4	1.4	-	12.7	7.30	-
3E 50-100/0.55	0.55	0.75		0.91	80.2	82.8	82.9	3.0	1.7	-	20.5	11.8	-
3E 50-100/0.75	0.75	1		1.05	80.9	82.3	82.1	3.3	1.9	-	19.7	11.4	-
3E 50-125/1.5	1.5	2		1.77	83.5	84.3	84.6	5.8	3.3	-	47.4	27.4	-
3E 50-125/2.2	2.2	3		2.55	86.2	87.0	86.0	8.2	4.7	-	66.6	38.4	-
3E 50-160/3.0	3.0	4		3.44	85.9	87.5	87.1	11.1	6.4	-	90.0	52.0	-
3E 50-160/4.0	4	5.5		4.52	85.8	88.3	88.4	15.1	8.7	-	131.8	76.1	-
3E 50-200/5.5	5.5	7.5		6.09	89.2	90.6	90.4	-	10.6	6.1	-	115.3	67.0
3E 50-200/7.5	7.5	10		8.26	89	90.7	90.8	-	13.6	7.9	-	144.0	83.0
3E 50-200/11	11	15		11.98	90.4	91.2	91.8	-	21.3	12.3	-	184.0	107.0
3E 65-100/0.55	0.55	0.75		0.91	80.2	82.8	82.9	3.0	1.7	-	20.5	11.8	-
3E 65-100/0.75	0.75	1	IE3	1.05	80.9	82.3	82.1	3.3	1.9	-	19.7	11.4	-
3E 65-100/1.1	1.1	1.5		1.77	83.5	84.3	84.6	5.8	3.3	-	47.4	27.4	-
3E 65-100/1.5	1.5	2		1.77	83.5	84.3	84.6	5.8	3.3	-	47.4	27.4	-
3E 65-125/2.2	2.2	3		2.55	86.2	87.0	86.0	8.2	4.7	-	66.6	38.4	-
3E 65-125/3.0	3.0	4		3.44	85.9	87.5	87.1	11.1	6.4	-	90.0	52.0	-
3E 65-125/4.0	4.0	5.5		4.52	85.8	88.3	88.4	15.1	8.7	-	131.8	76.1	-
3E 65-160/5.5	5.5	7.5		6.09	89.2	90.6	90.4	-	10.6	6.1	-	115.3	67.0
3E 65-160/7.5	7.5	10		8.26	89	90.7	90.8	-	13.6	7.9	-	144.0	83.0
3E 65-200/9.2	9.2	12.5		10.12	90.1	90.8	90.9	-	17.2	10.0	-	166.0	96.0
3E 65-200/11	11	15		11.98	90.4	91.2	91.8	-	21.3	12.3	-	184.0	107.0
3E 65-200/15	15	20		16.32	91.2	92.0	91.9	-	27.7	17.3	-	225.0	130.0
3E 80-100/1.5	1.5	2		1.77	83.5	84.3	84.6	5.8	3.3	-	47.4	27.4	-
3E 80-100/2.2	2.2	3		2.55	86.2	87.0	86.0	8.2	4.7	-	66.6	38.4	-
3E 80-160/9.2	9.2	12.5		10.12	90.1	90.8	90.9	-	17.2	10.0	-	166.0	96.0
3E 80-160/11	11	15		11.98	90.4	91.2	91.8	-	21.3	12.3	-	184.0	107.0
3E 80-160/15	15	20		16.32	91.2	92.0	91.9	-	27.7	17.3	-	225.0	130.0
3E 80-200/18.5	18.5	25		19.98	91.6	93.0	92.6	-	35.0	20.3	-	328.0	190.0
3E 80-200/22	22	30		23.58	92.0	93.1	93.2	-	39.7	23.6	-	391.0	227.0
3E 100-160/11	11	15		11.98	90.4	91.2	91.8	-	21.3	12.3	-	184.0	107.0
3E 100-160/15	15	20		16.32	91.2	92.0	91.9	-	27.7	17.3	-	225.0	130.0
3E100-160/18.5	18.5	25		19.98	91.6	93.0	92.6	-	35.0	20.3	-	328.0	190.0

MOTOR DATA 3E 4 POLE

Pump type	Motor Size	Motor Power [kW]	Motor Power [HP]	Efficiency	Input [kW]	Efficiency (% load) and power-factor η% 50%	75%	100%	cos-φ	Full load current [A] 230 V	400 V	690 V	Locked rotor current [A] 230 V	400 V	690 V
3E4 32-160/0.37R	80	0.37	0.5	IE2	0.71	71.9	75.9	77.7	0.75	2.4	1.4	-	14.8	8.6	-
3E4 32-160/0.37		0.37	0.5		0.71	71.9	75.9	77.7	0.75	2.4	1.4	-	14.8	8.6	-
3E4 32-200/0.55		0.55	0.75		0.71	71.9	75.9	77.7	0.75	2.4	1.4	-	14.8	8.6	-
3E4 40-160/0.37R	80	0.37	0.5		0.71	71.9	75.9	77.7	0.75	2.4	1.4	-	14.8	8.6	-
3E4 40-160/0.37		0.37	0.5		0.71	71.9	75.9	77.7	0.75	2.4	1.4	-	14.8	8.6	-
3E4 40-200/0.55		0.55	0.75		0.71	71.9	75.9	77.7	0.75	2.4	1.4	-	14.8	8.6	-
3E4 40-200/0.75	90	0.75	1	IE3	1.31	81.5	83.4	84.1	0.71	4.6	2.7	-	32.9	19	-
3E4 50-125/0.37	71	0.37	0.5	IE2	0.71	71.9	75.9	77.7	0.75	2.4	1.4	-	14.8	8.6	-
3E4 50-160/0.55	80	0.55	0.75		0.71	71.9	75.9	77.7	0.75	2.4	1.4	-	14.8	8.6	-
3E4 50-200/0.75	90	0.75	1	IE3	1.31	81.5	83.4	84.1	0.71	4.6	2.7	-	32.9	19	-
3E4 50-200/1.1		1.1	1.5		1.31	81.5	83.4	84.1	0.71	4.6	2.7	-	32.9	19	-
3E4 50-200/1.5	100	1.5	2		1.74	81.6	85.0	85.3	0.67	6.4	3.7	-	47.1	27.2	-
3E4 65-125/0.55	80	0.55	0.75	IE2	0.71	71.9	75.9	77.7	0.75	2.4	1.4	-	14.8	8.6	-
3E4 65-160/0.75	90	0.75	1.5	IE3	1.31	81.5	83.4	84.1	0.71	4.6	2.7	-	32.9	19	-
3E4 65-160/1.1		1.1	1.5		1.31	81.5	83.4	84.1	0.71	4.6	2.7	-	32.9	19	-
3E4 65-200/1.5	100	1.5	2		1.74	81.6	85.0	85.3	0.67	6.4	3.7	-	47.1	27.2	-
3E4 65-200/2.2		2.2	3		2.55	81.8	85.4	86.7	0.63	10.0	5.8	-	80.2	46.3	-
3E4 80-160/1.5		1.5	2		1.74	81.6	85.0	85.3	0.67	6.4	3.7	-	47.1	27.2	-
3E4 80-200/2.2		2.2	3		2.55	81.8	85.4	86.7	0.63	10.0	5.8	-	80.2	46.3	-
3E4 80-200/3		3.0	4		3.42	85.7	87.7	87.8	0.72	11.8	6.8	-	83.1	48	-
3E4 100-160/1.5		1.5	2		1.74	81.6	85.0	85.3	0.67	6.4	3.7	-	47.1	27.2	-
3E4 100-160/2.2		2.2	3		2.55	81.8	85.4	86.7	0.63	10.0	5.8	-	80.2	46.3	-

MOTOR DATA 3ES 2 POLE

Pump type	Motor Size	Motor Power [kW]	Motor Power [HP]	Input [kW]	Efficiency (% load) and power-factor η% 50%	η% 75%	η% 100%	cos-φ	Full load current [A] 230 V	400 V	690 V	Locked rotor current [A] 230 V	400 V	690 V
3ES 32-125/0.75	80	0.75	1	1.26	78.7	81.7	81.5	0.78	4.3	2.5	-	29.4	17.0	-
3ES 40-160/1.5	90S	1.5	2	1.77	83.2	84.8	84.2	0.85	5.2	3.0	-	43.6	25.2	-
3ES 40-160/2.2	90L	2.2	3	2.61	85.0	86.2	86.5	0.82	8.0	4.6	-	73.3	42.3	-
3ES 40-200/3.0	100L	3.0	4	3.45	82.3	85.8	87.1	0.89	9.7	5.6	-	85.4	49.3	-
3ES 40-200/4.0	112M	4.0	5.5	4.51	86.8	87.8	88.1	0.93	12.1	7.0	-	116.4	67.2	-
3ES 40-200/7.5	132S	7.5	10	8.35	88.6	89.2	90.1	0.92	-	13.1	7.6	-	116.6	67.3
3ES 50-100/0.75	80	0.75	1	1.26	78.7	81.7	81.5	0.78	4.3	2.5	-	29.4	17.0	-
3ES 50-125/1.5	90S	1.5	2	1.77	83.2	84.8	84.2	0.85	5.2	3.0	-	43.6	25.2	-
3ES 50-125/2.2	90L	2.2	3	2.61	85.0	86.2	86.5	0.82	8.0	4.6	-	73.3	42.3	-
3ES 50-160/3.0	100L	3.0	4	3.45	82.3	85.8	87.1	0.89	9.7	5.6	-	85.4	49.3	-
3ES 50-160/4.0	112M	4.0	5.5	4.51	86.8	87.8	88.1	0.93	12.1	7.0	-	116.4	67.2	-
3ES 50-200/5.5	132S	5.5	7.5	6.24	88.0	88.5	89.2	0.9	-	10.0	5.8	-	89.0	51.4
3ES 50-200/7.5		7.5	10	8.35	88.6	89.2	90.1	0.92	-	13.1	7.6	-	116.6	67.3
3ES 50-200/11	160M	11	15	12.15	87.4	89.8	91.2	0.89	-	19.7	11.4	-	179.3	103.5
3ES 65-100/0.75	80	0.75	1	1.26	78.7	81.7	81.5	0.78	4.3	2.5	-	29.4	17.0	-
3ES 65-100/1.1	80	1.1	2	1.26	78.7	81.7	82.7	0.76	4.2	2.4	-	38.7	22.3	-
3ES 65-100/1.5	90S	1.5	2	1.77	83.2	84.8	84.2	0.85	5.2	3.0	-	43.6	25.2	-
3ES 65-125/2.2	90L	2.2	3	2.61	85.0	86.2	86.5	0.82	8.0	4.6	-	73.3	42.3	-
3ES 65-125/3.0	100L	3.0	4	3.45	82.3	85.8	87.1	0.89	9.7	5.6	-	85.4	49.3	-
3ES 65-125/4.0	112M	4.0	5.5	4.51	86.8	87.8	88.1	0.93	12.1	7.0	-	116.4	67.2	-
3ES 65-160/5.5	132S	5.5	7.5	6.24	88.0	88.5	89.2	0.9	-	10.0	5.8	-	89.0	51.4
3ES 65-160/7.5		7.5	10	8.35	88.6	89.2	90.1	0.92	-	13.1	7.6	-	116.6	67.3
3ES 65-200/9.2	132M	9.2	12.5	10.17	88.6	89.8	90.7	0.89	-	16.5	9.5	-	166.7	96.2
3ES 65-200/11	160M	11	15	12.15	87.4	89.8	91.2	0.89	-	19.7	11.4	-	179.3	103.5
3ES 65-200/15		15	20	16.46	91.0	91.3	91.9	0.89	-	26.7	15.4	-	259.0	149.5
3ES 80-100/1.5	90S	1.5	2	1.77	83.2	84.8	84.2	0.85	5.2	3.0	-	43.6	25.2	-
3ES 80-100/2.2	90L	2.2	3	2.61	85.0	86.2	86.5	0.82	8.0	4.6	-	73.3	42.3	-
3ES 80-160/9.2	132M	9.2	12.5	10.17	88.6	89.8	90.7	0.89	-	16.5	9.5	-	166.7	96.2
3ES 80-160/11	160M	11	15	12.15	87.4	89.8	91.2	0.89	-	19.7	11.4	-	179.3	103.5
3ES 80-160/15		15	20	16.46	91.0	91.3	91.9	0.89	-	26.7	15.4	-	259.0	149.5
3ES 80-200/18.5	160L	18.5	25	20.12	91.6	92.8	92.4	0.88	-	33.0	19.1	-	353.1	203.9
3ES 80-200/22	180M	22	30	23.69	92.3	92.9	92.9	0.9	-	38.0	22.0	-	361.0	209.0
3ES 100-160/11	160M	11	15	12.15	87.4	89.8	91.2	0.89	-	19.7	11.4	-	179.3	103.5
3ES 100-160/15		15	20	16.46	91.0	91.3	91.9	0.89	-	26.7	15.4	-	259.0	149.5
3ES 100-160/18.5	160L	18.5	25	20.12	91.6	92.8	92.4	0.88	-	33.0	19.1	-	353.1	203.9

MOTOR DATA 3ES 4 POLE

Pump type	Motor Size	Motor Power [kW]	Motor Power [HP]	Efficiency	Input [kW]	Efficiency (% load) and power-factor η% 50%	75%	100%	cos-φ	Full load current [A] 230 V	400 V	690 V	Locked rotor current [A] 230 V	400 V	690 V
3ES4 32-200/0.55	80	0.55	0.75	IE2	0.71	71.9	75.9	77.7	0.75	2.4	1.4	-	14.8	8.6	-
3ES4 40-200/0.55	80	0.55	0.75		0.71	71.9	75.9	77.7	0.75	2.4	1.4	-	14.8	8.6	-
3ES4 40-200/0.75	80	0.75	1	IE3	0.92	80.7	81.5	82.5	0.74	3.1	1.8	-	17.3	10.0	-
3ES4 50-160/0.55	80	0.55	0.75	IE2	0.71	71.9	75.9	77.7	0.75	2.4	1.4	-	14.8	8.6	-
3ES4 50-200/0.75	80	0.75	1	IE3	0.92	80.7	81.5	82.5	0.74	3.1	1.8	-	17.3	10.0	-
3ES4 50-200/1.1	90S	1.1	1.5		1.30	83.3	84.3	84.1	0.75	4.3	2.5	-	30.7	17.7	-
3ES4 50-200/1.5	90L	1.5	2		1.80	84.1	85.2	85.3	0.72	6.2	3.6	-	41.0	23.7	-
3ES4 65-125/0.55	80	0.55	0.75	IE2	0.71	71.9	75.9	77.7	0.75	2.4	1.4	-	14.8	8.6	-
3ES4 65-160/0.75	80	0.75	1	IE3	0.92	80.7	81.5	82.5	0.74	3.1	1.8	-	17.3	10.0	-
3ES4 65-160/1.1	90S	1.1	1.5		1.30	83.3	84.3	84.1	0.75	4.3	2.5	-	30.7	17.7	-
3ES4 65-200/1.5	90L	1.5	2		1.80	84.1	85.2	85.3	0.72	6.2	3.6	-	41.0	23.7	-
3ES4 65-200/2.2	100L	2.2	3		2.58	83.2	86.2	86.7	0.63	10.2	5.9	-	73.6	42.5	-
3ES4 80-160/1.5	90L	1.5	2	IE3	1.80	84.1	85.2	85.3	0.72	6.2	3.6	-	41.0	23.7	-
3ES4 80-200/2.2	100L	2.2	3		2.58	83.2	86.2	86.7	0.63	10.2	5.9	-	73.6	42.5	-
3ES4 80-200/3	100L	3.0	4		3.44	85.1	87.1	87.7	0.73	11.8	6.8	-	95.4	55.1	-
3ES4 100-160/1.5	90L	1.5	2		1.80	84.1	85.2	85.3	0.72	6.2	3.6	-	41.0	23.7	-
3ES4 100-160/2.2	100L	2.2	3		2.58	83.2	86.2	86.7	0.63	10.2	5.9	-	73.6	42.5	-

NOISE DATA 3E-3ES 2 POLE

Pump type	Power [kW]	Power [HP]	LpA - dB(A) *
3E 32-125/0.37	0.37	0.5	61
3E 32-125/0.55	0.55	0.75	62
3E 32-125/0.75	0.75	1	
3E 40-160/1.1	1.1	1.5	69
3E 40-160/1.5	1.5	2	
3E 40-160/2.2	2.2	3	
3E 40-200/3	3	4	76
3E 40-200/4	4	5.5	
3E 40-200/7.5	7.5	10	79
3E 50-100/0.37	0.37	0.5	61
3E 50-100/0.55	0.55	0.75	62
3E 50-100/0.75	0.75	1	
3E 50-125/1.5	1.5	2	69
3E 50-125/2.2	2.2	3	
3E 50-160/3	3	4	76
3E 50-160/4	4	5.5	
3E 50-200/5.5	5.5	7.5	79
3E 50-200/7.5	7.5	10	
3E 50-200/11	11	15	82
3E 65-100/0.55	0.55	0.75	62
3E 65-100/0.75	0.75	1	
3E 65-100/1.1	1.1	1.5	69
3E 65-100/1.5	1.5	2	
3E 65-125/2.2	2.2	3	
3E 65-125/3	3	4	76
3E 65-125/4	4	5.5	
3E 65-160/5.5	5.5	7.5	79
3E 65-160/7.5	7.5	10	
3E 65-200/9.2	9.2	12.5	82
3E 65-200/11	11	15	
3E 65-200/15	15	20	86
3E 80-100/1.5	1.5	2	69
3E 80-100/2.2	2.2	3	
3E 80-160/9.2	9.2	12.5	82
3E 80-160/11	11	15	
3E 80-160/15	15	20	86
3E 80-200/18.5	18.5	25	
3E 80-200/22	22	30	
3E 100-160/11	11	15	80
3E 100-160/15	15	20	
3E 100-160/18.5	18.5	25	83-82

Pump type	Power [kW]	Power [HP]	LpA - dB(A) *
3ES 32-125/0.75	0.75	1	<70
3ES 40-160/1.5	1.5	2	
3ES 40-160/2.2	2.2	3	
3ES 40-200/3	3	4	
3ES 40-200/4	4	5.5	
3ES 40-200/7.5	7.5	10	72
3ES 50-100/0.75	0.75	1	<70
3ES 50-125/1.5	1.5	2	
3ES 50-125/2.2	2.2	3	
3ES 50-160/3	3	4	
3ES 50-160/4	4	5.5	
3ES 50-200/5.5	5.5	7.5	72
3ES 50-200/7.5	7.5	10	
3ES 50-200/11	11	15	74
3ES 65-100/0.75	0.75	1	<70
3ES 65-100/1.1	1.1	1.5	
3ES 65-100/1.5	1.5	2	
3ES 65-125/2.2	2.2	3	<70
3ES 65-125/3	3	4	
3ES 65-125/4	4	5.5	
3ES 65-160/5.5	5.5	7.5	72
3ES 65-160/7.5	7.5	10	
3ES 65-200/9.2	9.2	12.5	
3ES 65-200/11	11	15	74
3ES 65-200/15	15	20	
3ES 80-100/1.5	1.5	2	<70
3ES 80-100/2.2	2.2	3	
3ES 80-160/9.2	9.2	12.5	72
3ES 80-160/11	11	15	74
3ES 80-160/15	15	20	
3ES 80-200/18.5	18.5	25	
3ES 80-200/22	22	30	77
3ES 100-160/11	11	15	74
3ES 100-160/15	15	20	
3ES 100-160/18.5	18.5	25	

* Mean value of several measures at 1m distance around the pump.
Tolerance ± 2.5 dB.
Sound pressure level of motor pumps with AEG

NOISE DATA 3E-3ES 4 POLE

Pump type	Power [kW]	Power [HP]	LpA - dB(A) *
3E4 32-160/0.37	0.37	0.5	<70
3E4 32-160/0.37R	0.37	0.5	
3E4 32-200/0.55	0.55	0.75	
3E4 40-160/0.37	0.37	0.5	
3E4 40-160/0.37R	0.37	0.5	
3E4 40-200/0.55	0.55	0.75	
3E4 40-200/0.75	0.75	1	
3E4 50-125/0.37	0.37	0.5	
3E4 50-160/0.55	0.55	0.75	
3E4 50-200/0.75	0.75	1	
3E4 50-200/1.1	1.1	1.5	
3E4 50-200/1.5	1.5	2	
3E4 65-125/0.55	0.55	0.75	
3E4 65-160/0.75	0.75	1	
3E4 65-160/1.1	1.1	1.5	
3E4 65-200/1.5	1.5	2	
3E4 65-200/2.2	2.2	3	
3E4 80-160/1.5	1.5	2	
3E4 80-200/2.2	2.2	3	
3E4 80-200/3	3	4	
3E4 100-160/1.5	1.5	2	
3E4 100-160/2.2	2.2	3	

Pump type	Power [kW]	Power [HP]	LpA - dB(A) *
3ES4 32-200/0.55	0.55	0.75	<70
3ES4 40-200/0.55	0.55	0.75	
3ES4 40-200/0.75	0.75	1	
3ES4 50-160/0.55	0.55	0.75	
3ES4 50-200/0.75	0.75	1	
3ES4 50-200/1.1	1.1	1.5	
3ES4 50-200/1.5	1.5	2	
3ES4 65-125/0.55	0.55	0.75	
3ES4 65-160/0.75	0.75	1	
3ES4 65-160/1.1	1.1	1.5	
3ES4 65-200/1.5	1.5	2	
3ES4 65-200/2.2	2.2	3	
3ES4 80-160/1.5	1.5	2	
3ES4 80-200/2.2	2.2	3	
3ES4 80-200/3	3	4	
3ES4 100-160/1.5	1.5	2	
3ES4 100-160/2.2	2.2	3	

* Mean value of several measures at 1m distance around the pump.
Tolerance ± 2.5 dB.
Sound pressure level of motor pumps with AEG

The contents of this publication shall not be regarded as binding.
EBARA Pumps Europe S.p.A. reserves the right to make any changes it deems appropriate without prior notice.

REV.C 09/25

EBARA Pumps Europe S.p.A.
Via Torri di Confine 2/1 int. C
36053 Gambellara (Vicenza), Italy
Tel. +39 0444 706811
ebarapumps.epe@ebara.com
www.ebaraeurope.com

EBARA Pumps Europe S.p.A. UK
Unit A, Park 34
Collett Way - Didcot
Oxfordshire - OX11 7WB, United Kingdom
Tel. +44 1895 439027
marketing.epuk@ebara.com

EBARA POMPY POLSKA Sp. z o.o.
ul. Działkowa 115 A
02-234 Warszawa, Poland
Tel. +48 22 3909920
marketing.epl@ebara.com

EBARA Pumps Europe S.p.A. GERMANY
Elisabeth-Selbert-Straße 2
63110 Rodgau, Germany
Tel. +49 (0) 6106-660 99-0
info.epde@ebara.com

EBARA Pumps Europe S.p.A. FRANCE
122, Rue Pasteur
69780 Toussieu, France
Tel.: +33 04 72 76 94 82
mktg.efr@ebara.com

EBARA Pumps Europe Nordic
Gustav III Boulevard 34,
169 73 Solna, Sweden
info.epen@ebara.com

EBARA Pumps South Africa (PTY) LTD
26 Kyalami Boulevard,
Kyalami Business Park, 1684, Midrand,
Gauteng, South Africa
Tel. +27 11 466 1844
ebara.epsa@ebara.com

EBARA Pumps East Africa
Sunflag Industrial Park, Unit 5, Mombasa Road,
P.O BOX 18851-00100, Nairobi, Kenya
Tel. +254709491900
info.epea@ebara.com
www.ebaraeurope.co.ke

EBARA West Africa Limited
ewasales.epe@ebara.com