EBARA

Japanese Technology since 1912

3D SERIES

Data Book 50Hz

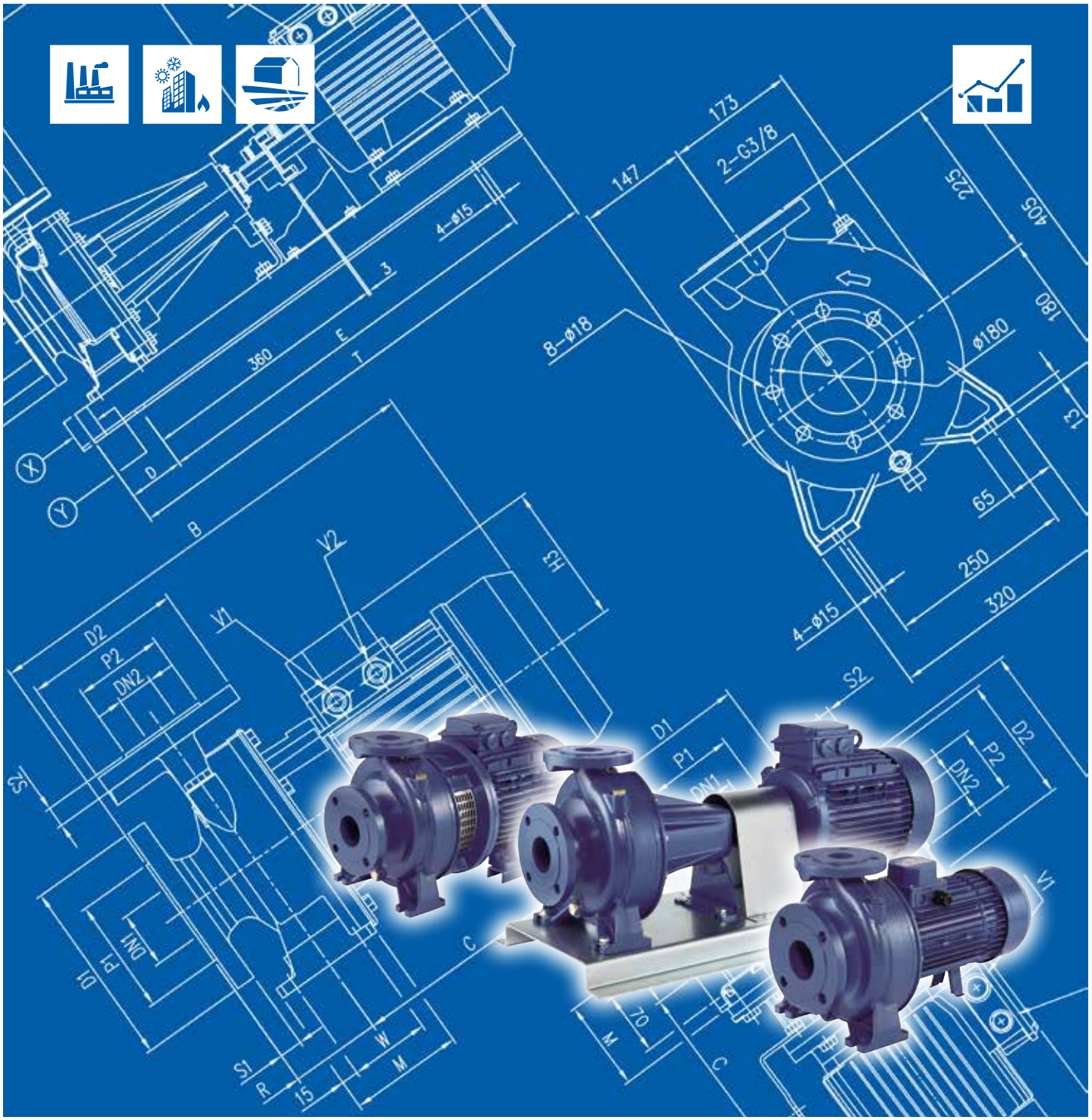

CONTENTS

50Hz

Rev.W

	Page
- SPECIFICATIONS	**200**
PERFORMANCE RANGE	201-202
SELECTION CHART	203
TYPE KEY	204
CURVES SPECIFICATIONS	205
MEI INDEX SPECIFICATIONS	206
MEI INDEX VALUE	207
PERFORMANCE CURVES 32-125	208
PERFORMANCE CURVES 32-160	209
PERFORMANCE CURVES 32-200	210
PERFORMANCE CURVES 40-125	211
PERFORMANCE CURVES 40-160	212
PERFORMANCE CURVES 40-200	213
PERFORMANCE CURVES 50-125	214
PERFORMANCE CURVES 50-160	215
PERFORMANCE CURVES 50-200	216
PERFORMANCE CURVES 65-125	217
PERFORMANCE CURVES 65-160	218
PERFORMANCE CURVES 65-200	219
- CONSTRUCTIONS	**300**
SECTIONAL VIEW DRAWING 3D	300
SECTIONAL VIEW TABLE 3D	301
SECTIONAL VIEW DRAWING 3DS 32, 40, 50	302
SECTIONAL VIEW DRAWING 3DS 65	303
SECTIONAL VIEW TABLE 3DS	304
SECTIONAL VIEW DRAWING 3DP	305
SECTIONAL VIEW TABLE 3DP	306
MECHANICAL SEAL	307-310
FLUID TEMPERATURE RANGE	311
BEARINGS 3D	312
BEARINGS 3DS-3DP	313
COUPLING 3DS	314
FLEXIBLE COUPLING 3DP	315
FITTINGS AND GASKETS	316
- DIMENSIONS AND WEIGHT	**400**
PUMP DIMENSIONS 3D UP TO 11kW	400
PUMP DIMENSIONS 3D 15 kW AND ABOVE	401
PUMP DIMENSIONS 3S 32, 40, 50	402
PUMP DIMENSIONS 3S 32, 65	403
PUMP DIMENSIONS 3DS 40, 50, 65	404
PUMP DIMENSIONS 3DS 32, 40, 50, 65	405
PUMP DIMENSIONS 3DP 32, 40, 50, 65	408
PACKING DIMENSIONS 3D	409
PACKING DIMENSIONS 3DS	410
PACKING DIMENSIONS 3DP	411
- TECHNICAL DATA	**500**
3D MOTOR DATA	500
3DS-3DP MOTOR DATA	501
3D NOISE DATA	502
3DS-3DP NOISE DATA	503

PERFORMANCE RANGE

50Hz

Rev.W

PUMP		
Liquid Handled	Type of liquid	Clean water
	Working temperature [°C]	min. -5 max. +120 For full details see section “FLUID TEMPERATURE RANGE”
Maximum working pressure [MPa]		1
Construction	Impeller	Closed centrifugal type for 32, 40, 50 series Reinforced laser welding for 40-200/11, 50-200/15 Closed centrifugal three dimensional blades for 65 series
	Shaft seal type	Mechanical seal
	Bearing	Sealed ball bearing
Pipe Connection	Suction	Flange DN 50, 65, 80 according to EN 1092-2
	Discharge	Flange DN 32, 40, 50, 65 according to EN 1092-2
Material	Casing	Cast iron EN-GJL-250-EN 1561
	Impeller	AISI 304 (32, 40, 50 series) AISI 316 made by precision casting (65 series)
	Shaft seal	Ceramic/Carbon/NBR (see MECHANICAL SEAL pages 307-311)
	Shaft	AISI 304 (wet extension)
	Bracket	Aluminium/Cast iron
Accessory	Counterflange	DN 32, 40, 50, 65, 80 (see FITTINGS TABLE page 315)
Applicable standard of test		ISO 9906:2012 – Grade 3B

MOTOR				
Type		3D	3DS	3DP
		Electric - TEFC		
		Single Phase	Three Phase	
Efficiency (Reg. 1781/2019)		IE2	IE3	
No. of Poles		2		
Rotation speed	[min^{-1}]	≈2900		
Insulation Class		F	F (temperature rise class B)	
Protection degree		IP 55		
Power rating	[kW]	1.1 ÷ 2.2	1.1 ÷ 22	
	[HP]	1.5 ÷ 3	1.5 ÷ 30	
Frequency	[Hz]	50		
Voltage	[V]	230 ±10%	230/400 ±10% (up to 4 kW) 400/690 ±10% (5.5 kW and above)	
Capacitor		Built in	-	
Over load protection		Provided by the user		
Casing material		Aluminium		
Motor support		Cast iron / Aluminium		
Dimensions of cable entry		M20x1.5	PG 13.5, PG 16, PG 21	M32x1.5, M40x1.5
			M20x1.5, M25x1.5	
Flange mount (IEC motor)		/	IM B5 (up to 2.2 kW) IM B35 (3.0 kW and above)	IM B3

PERFORMANCE RANGE

50Hz

Rev.W

PERFORMANCE RANGE

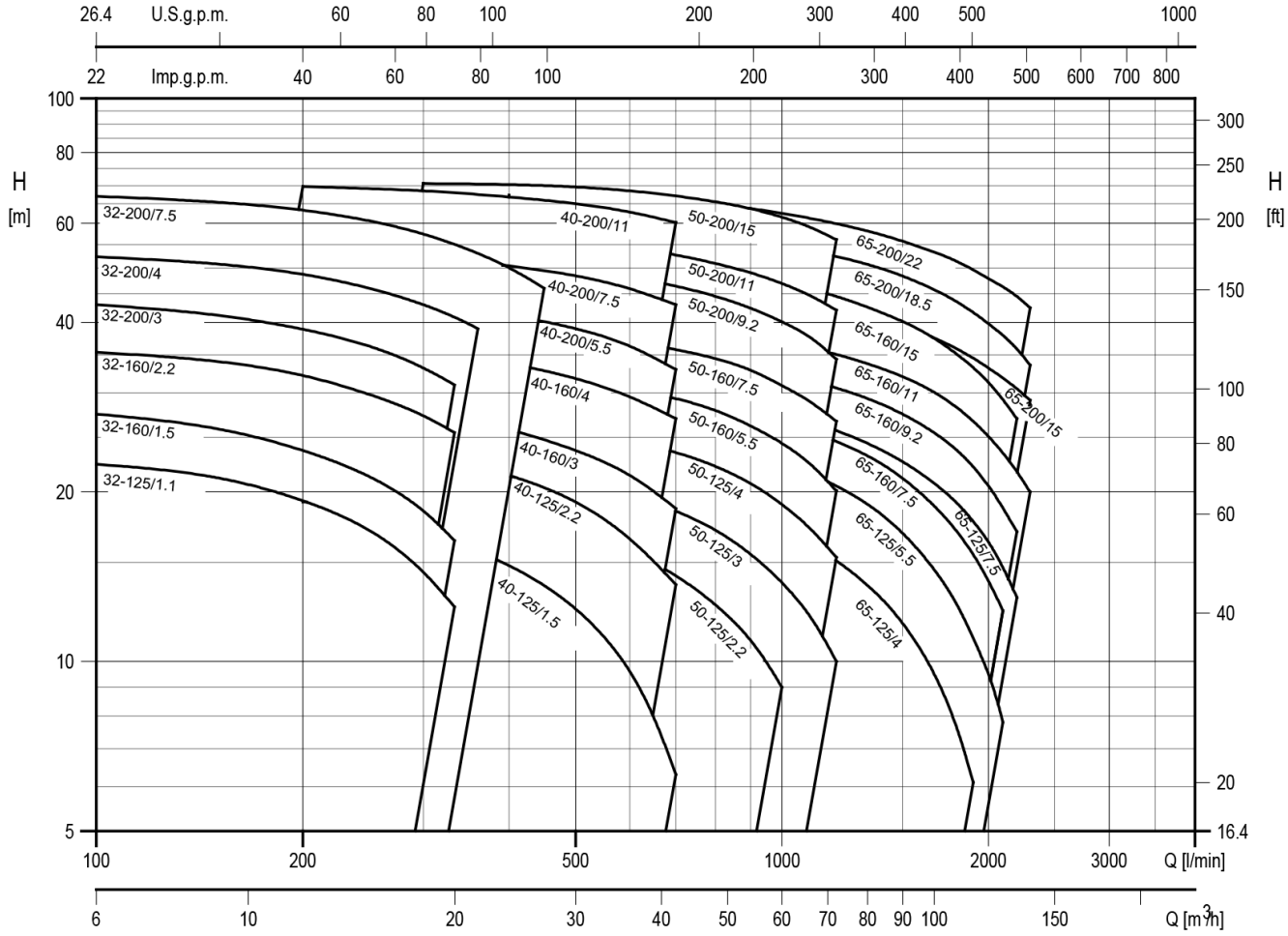

SELECTION CHART

3D SERIES 32 SIZE

Pump type	l/min	0	100	150	200	250	300	333	360	400	450
	m³/h	0	6	9	12	15	18	20	21,6	24	27
32-125/1.1(M) *		23	22,4	21,2	19,3	17,1	14,4	12,5	-	-	-
32-160/1.5(M) *		28,5	27,5	25,9	23,7	21,3	18,5	16,4	-	-	-
32-160/2.2(M) *		36,7	35,4	34,1	32,2	29,8	27,3	25,5	-	-	-
32-200/3.0		44	43	41	39	36,5	33	31	-	-	-
32-200/4.0		53	52,5	51	49	46	43	41	39	-	-
32-200/7.5		68	67	65	63	61	57	55	53	50	46

3D SERIES 40 SIZE

Pump type	l/min	0	200	250	300	350	400	450	500	600	700
	m³/h	0	12	15	18	21	24	27	30	36	42
40-125/1.5(M) *		19	18,2	17,6	16,8	15,9	14,8	13,7	12,4	9,6	6,3
40-125/2.2(M) *		25	24,4	23,9	23,2	22,4	21,4	20,4	19,2	16,5	13,7
40-160/3.0		31	29,4	28,7	27,8	26,8	25,8	24,8	23,7	21,4	18,7
40-160/4.0		38,8	37,2	36,5	35,7	34,8	33,8	32,8	31,8	29,5	27
40-200/5.5		45,5	44,5	44	43	42	41	40	39	36,3	33
40-200/7.5		55	53,5	53	52	51,5	50,5	49,5	48,5	46	43
40-200/11		71	70	69	68,5	67,5	67	66	65	63	60

3D SERIES 50 SIZE

Pump type	l/min	0	400	500	600	700	800	900	1000	1100	1200
	m³/h	0	24	30	36	42	48	54	60	66	72
50-125/2.2(M) *		19,5	18	17	15,7	14,2	12,6	10,9	9	-	-
50-125/3.0		22,5	21,5	20,8	19,8	18,5	17,1	15,5	13,8	12	10
50-125/4.0		26,5	25,8	25,3	24,5	23,5	22,2	20,7	19	17,2	15,3
50-160/5.5		33	32	31,5	30,5	29,3	27,9	26,2	24,4	22,4	20
50-160/7.5		39,5	38,2	37,6	36,9	35,8	34,5	32,9	30,9	28,9	26,7
50-200/9.2		51,5	-	49,5	48	46,5	44,5	42,5	40	37,6	34,4
50-200/11		57,5	-	55,5	54,5	52,5	51	49	47	44,5	42
50-200/15		71	-	69,5	68,5	67	65,5	63,5	61,5	59	56

3D SERIES 65 SIZE

Pump type	l/min	0	600	700	1000	1300	1600	1900	2100	2200	2300
	m³/h	0	36	42	60	78	96	114	126	132	138
65-125/4.0		22	20,4	19,8	17,2	14	10,4	6	-	-	-
65-125/5.5		26	-	25	22,5	19,4	15,5	11	8	-	-
65-125/7.5		31	-	29,6	27,5	24,7	21,5	17,8	14,7	13	-
65-160/7.5		31,6	-	29	26,6	23,5	19,8	15,5	12,3	-	-
65-160/9.2		36,5	-	34,7	32,4	29,6	26,3	22,2	18,8	17	-
65-160/11		40,5	-	39	37	34	31	27	23	22	20
65-160/15		48	-	46	44	41,5	38,4	34,6	31,9	30,5	29
65-200/15		54	-	51	47	43	38,6	33,3	29,2	27	-
65-200/18.5		60	-	58	55	51	47	41,5	37,9	35,9	33,6
65-200/22		68	-	65,5	62,5	58,5	54,5	49,5	46	44,5	42,5

* Single phase version only for 3D type

TYPE KEY

50Hz

Rev. W

TYPE KEY

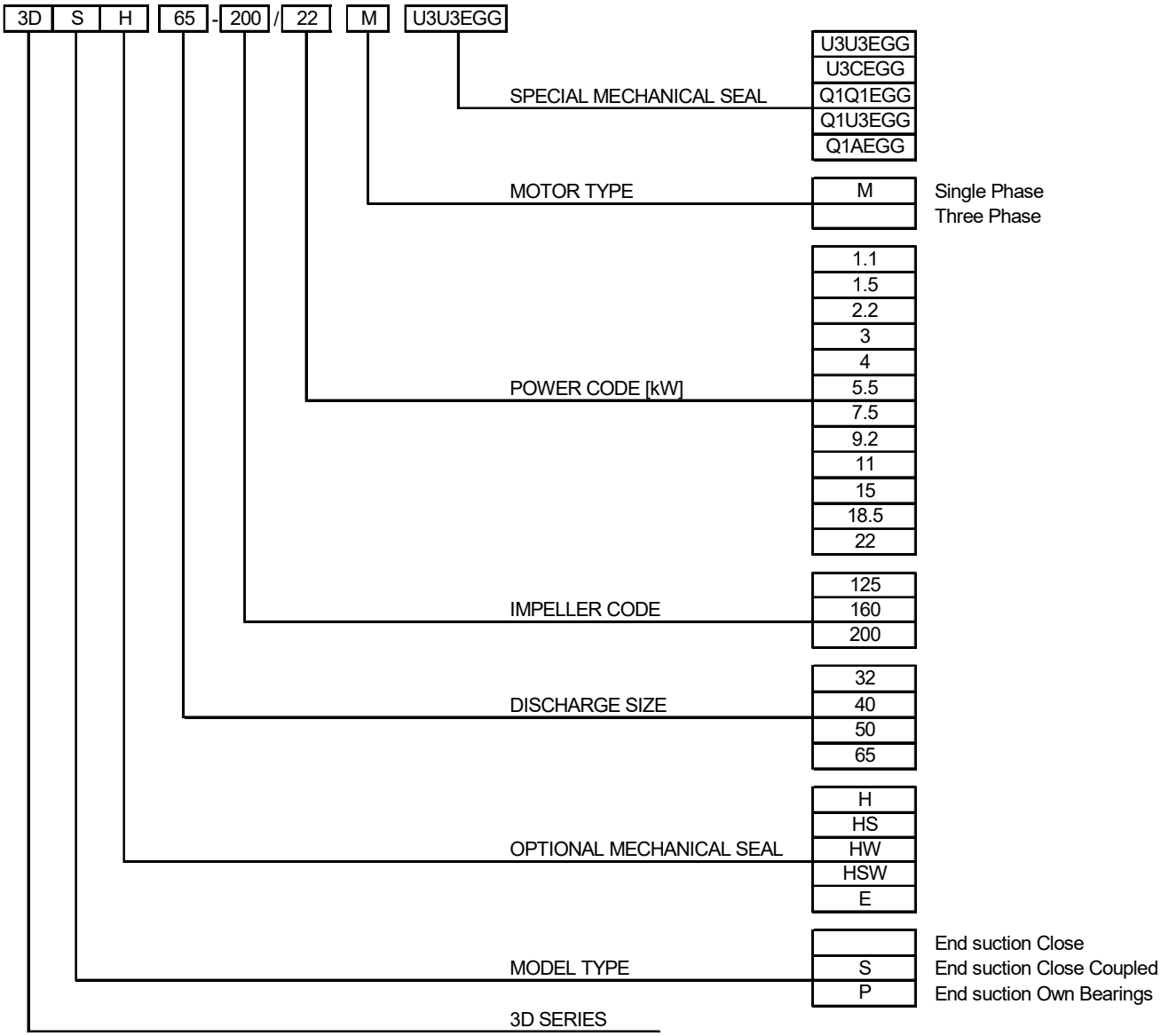

CURVES SPECIFICATIONS

The specifications below qualify the curves shown on the following pages.

Tolerances according to Test standard: ISO 9906:2012 – Grade 3B
The curves refer to effective speed of asynchronous motors at 50 Hz, 2 poles.
Measurements were carried out with clean water at 20°C of temperature and with a kinematic viscosity of ν = 1 mm^2/s (1 cSt)

The NPSH curve is an average curve obtained in the same conditions of performance curves.
The continuous curves indicate the recommended working range. The dotted curve is only a guide.
In order to avoid the risk of over-heating, the pumps should not be used at a flow rate below 10% of best efficiency point.

Symbols explanation:

Q	=	volume flow rate
H	=	total head
P_2	=	pump power input (shaft power)
η	=	pump efficiency
NPSH	=	net positive suction head required by the pump
MEI	=	minimum efficiency index

MEI INDEX SPECIFICATIONS

The minimum efficiency index (MEI) is a measure of the quality of a pump size in respect to its mean efficiency. The minimum efficiency index is based on the hydraulic efficiency and on the head at the best efficiency point.

The efficiency of a pump with trimmed impeller is usually lower than that of a pump with the full impeller diameter. The trimming of the impeller will adapt the pump to a fixed duty point, leading to a reduced energy consumption. The minimum efficiency index (MEI) is based on the full impeller diameter.

The operation of these water pumps with variabile duty points may be more efficient end economical when controlled, for example, by the use of a variable speed drive that matches the pump duty to the system.

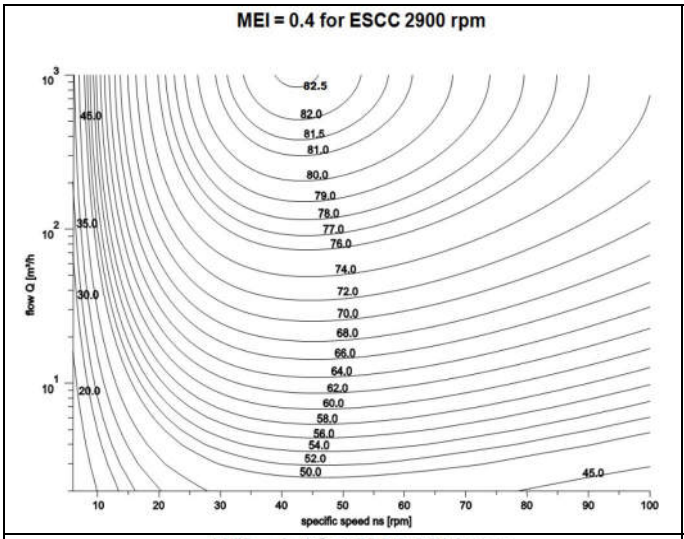

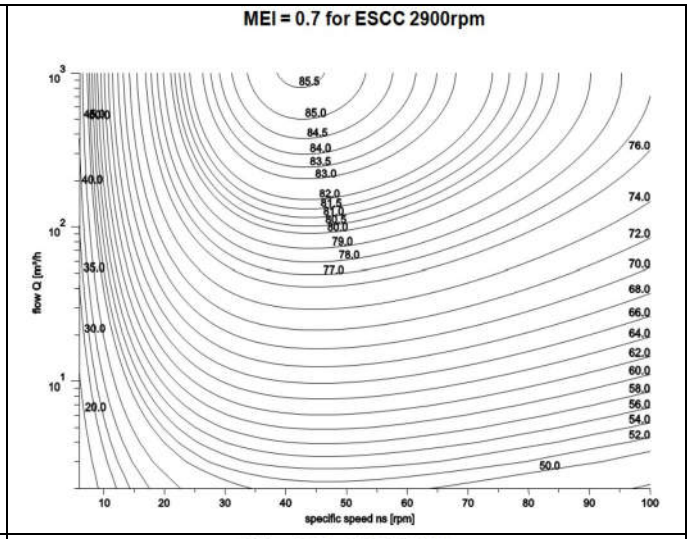

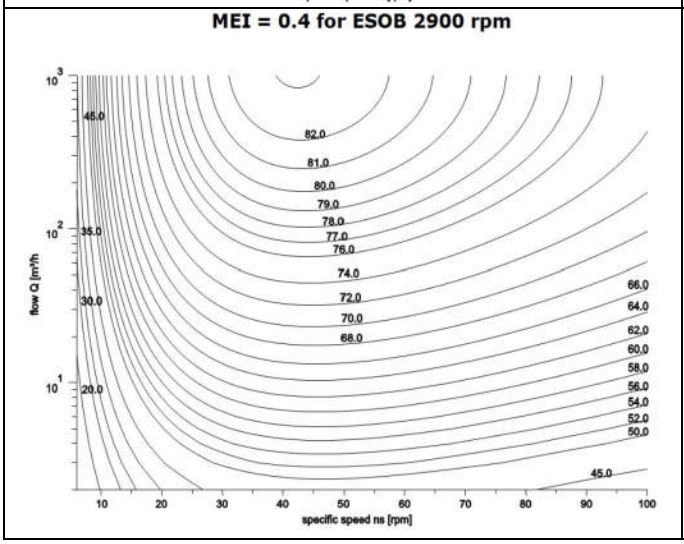

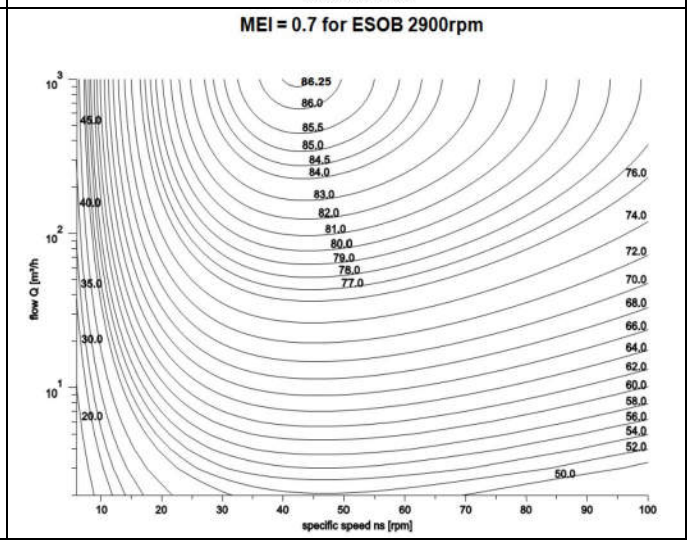

MEI INDEX VALUE

SIZE	MEI VALUE		
	3D	3DS	3DP
32-125	≥ 0.5	≥ 0.5	≥ 0.4
32-160	≥ 0.5	≥ 0.5	≥ 0.4
32-200	≥ 0.5	≥ 0.5	≥ 0.5
40-125	≥ 0.4	≥ 0.4	≥ 0.4
40-160	≥ 0.7	≥ 0.7	≥ 0.7
40-200	≥ 0.7	≥ 0.7	≥ 0.7
50-125	≥ 0.4	≥ 0.4	≥ 0.4
50-160	≥ 0.5	≥ 0.5	≥ 0.5
50-200	≥ 0.7	≥ 0.7	≥ 0.6
65-125	≥ 0.4	≥ 0.4	≥ 0.4
65-160	≥ 0.7	≥ 0.7	≥ 0.6
65-200	≥ 0.4	≥ 0.4	≥ 0.4

PERFORMANCE CURVES

50Hz

Rev.W

32-125/1.1 – Impeller diameter = 133 mm

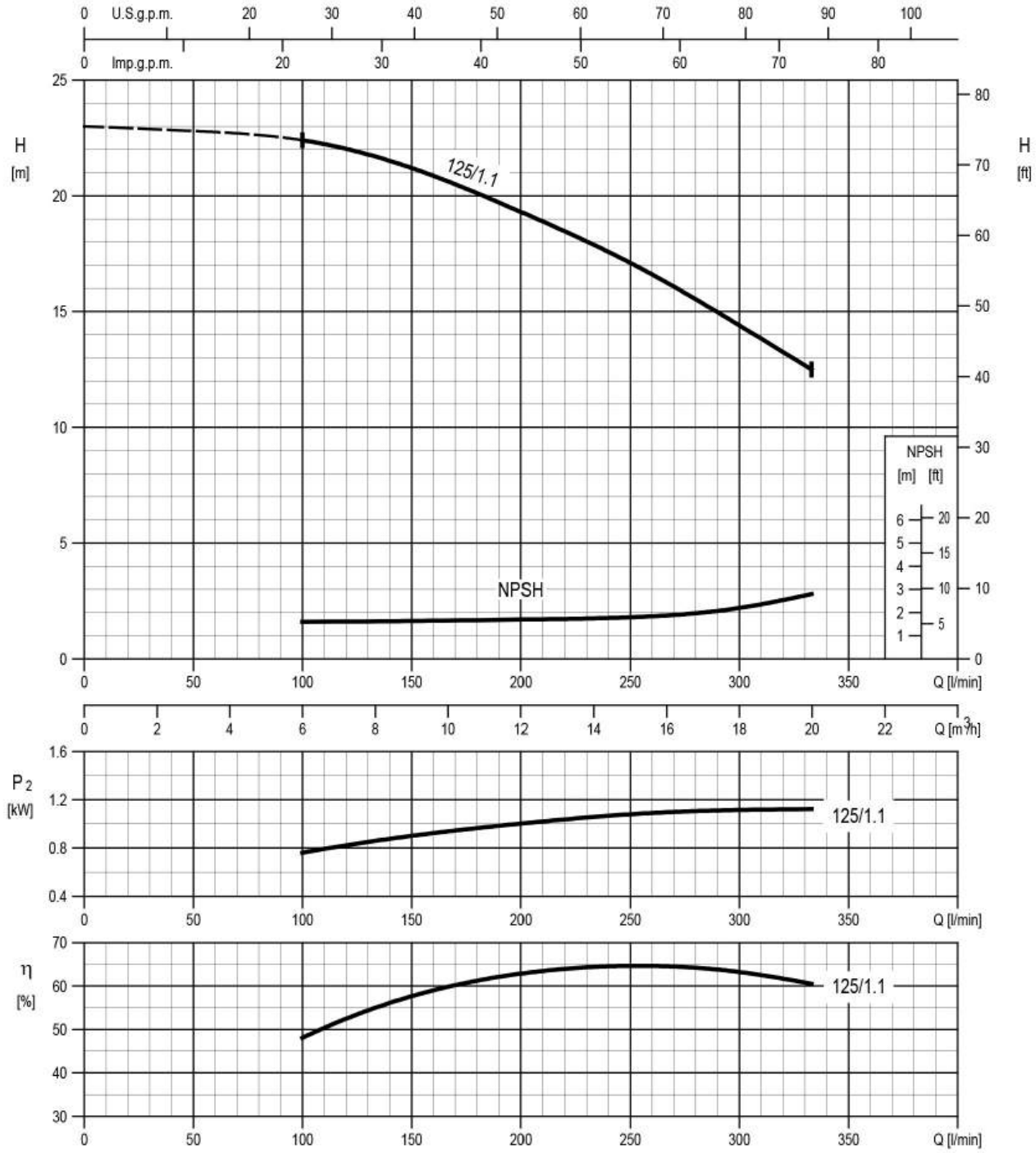

Rotation speed ≈ 2900 min^{-1}
Test standard: ISO 9906:2012 – Grade 3B

PERFORMANCE CURVES

50Hz

Rev.W

32-160/1.5 – Impeller diameter = 151 mm
32-160/2.2 – Impeller diameter = 166 mm

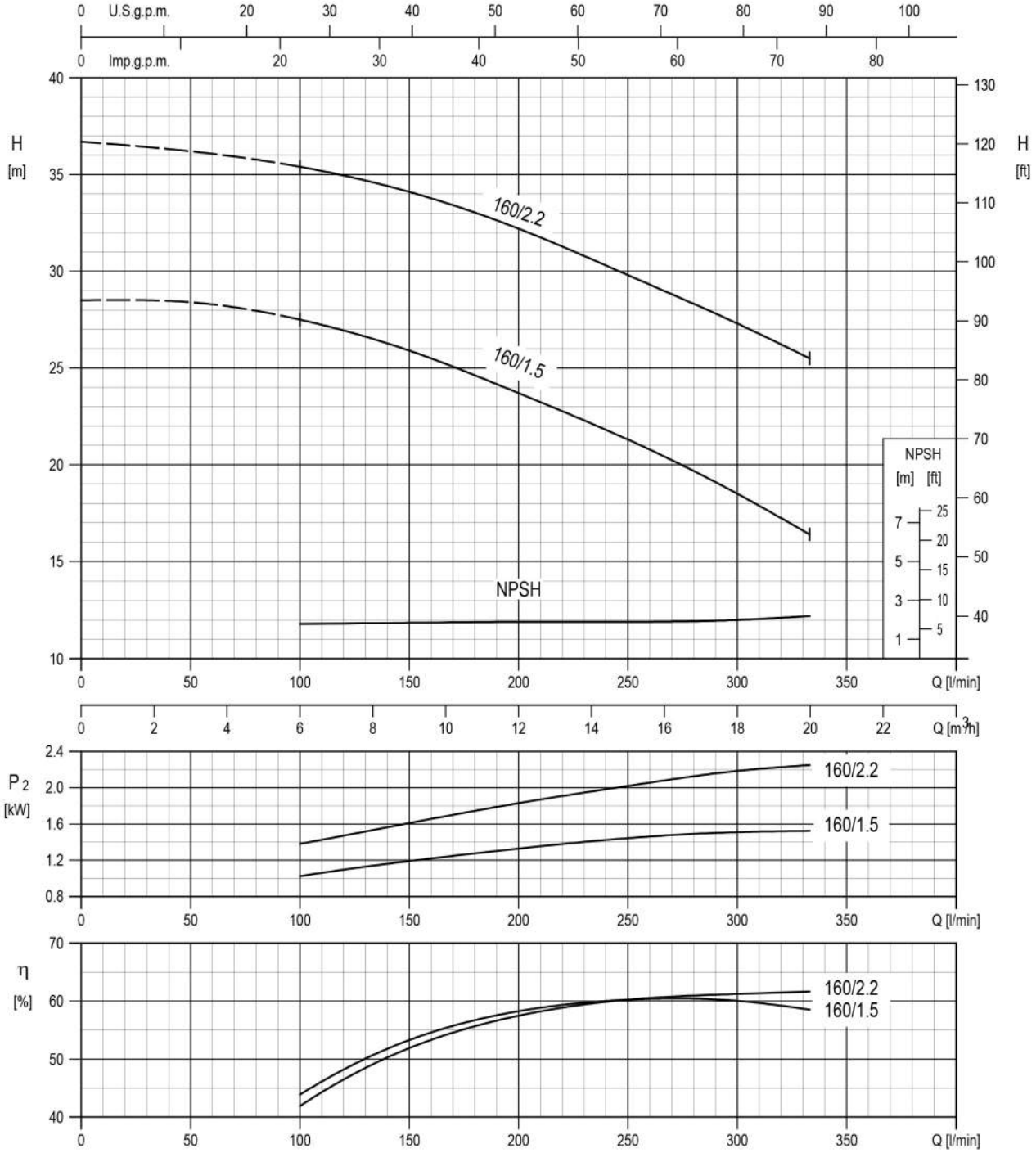

Rotation speed ≈ 2900 min^{-1}
Test standard: ISO 9906:2012 – Grade 3B

PERFORMANCE CURVES

50Hz

Rev.W

32-200/3.0 – Impeller diameter = 186 mm
32-200/4.0 – Impeller diameter = 200 mm
32-200/7.5 – Impeller diameter = 224 mm

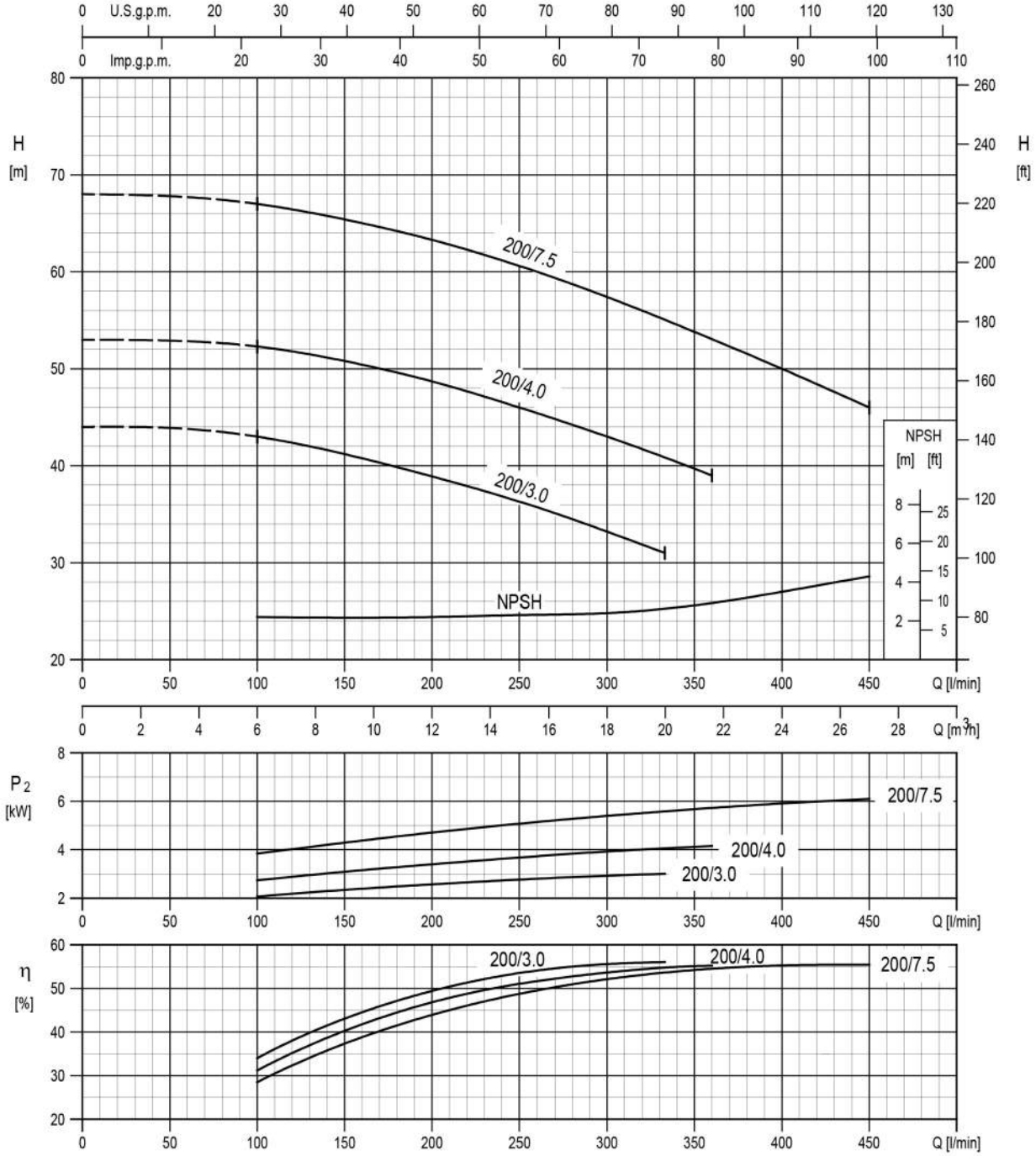

Rotation speed ≈ 2900 min^{-1}
Test standard: ISO 9906:2012 – Grade 3B

PERFORMANCE CURVES

50Hz

Rev.W

40-125/1.5 – Impeller diameter = 125 mm
40-125/2.2 – Impeller diameter = 140 mm

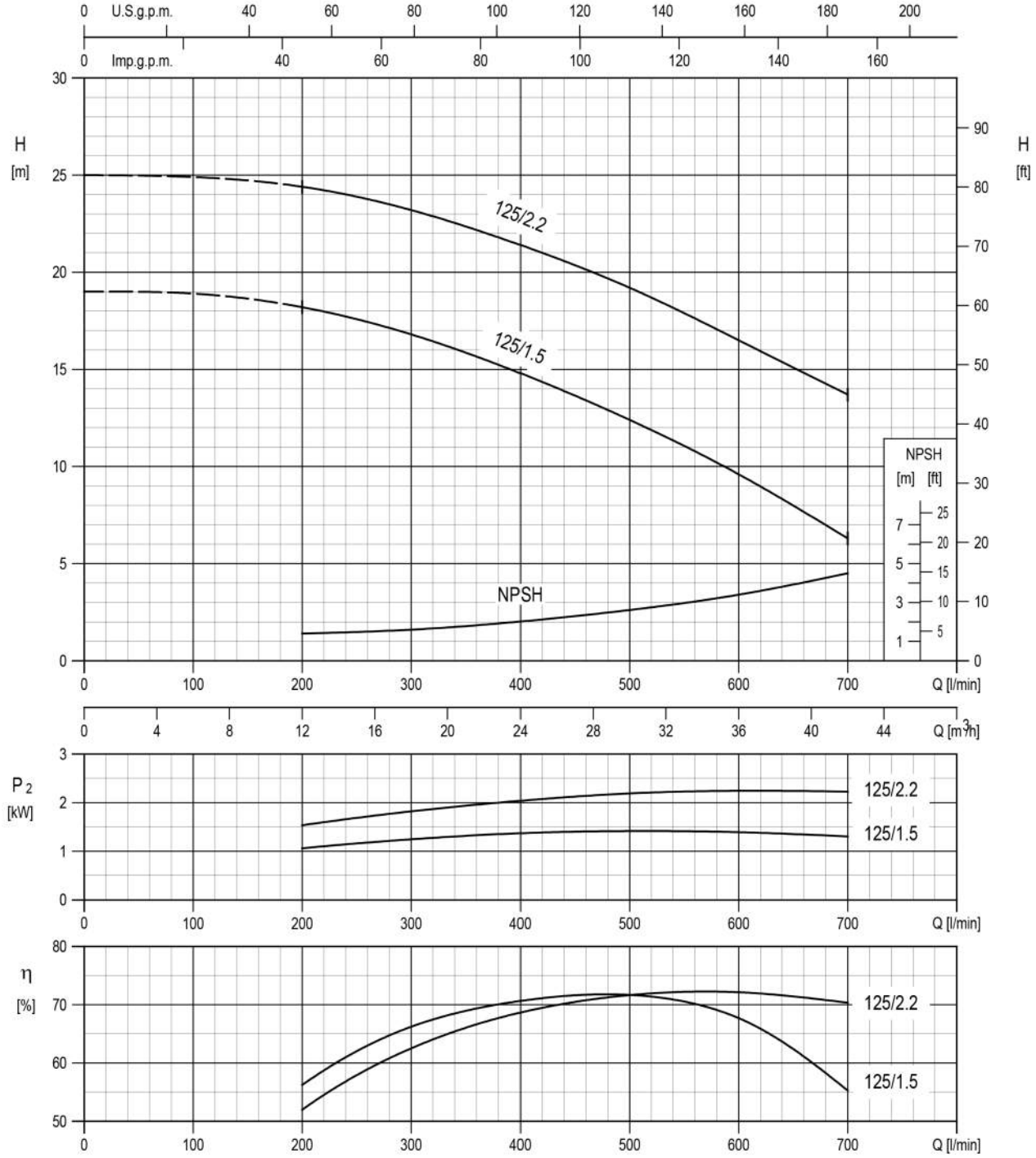

Rotation speed ≈ 2900 min^{-1}
Test standard: ISO 9906:2012 – Grade 3B

PERFORMANCE CURVES

50Hz

Rev.W

40-160/3.0 – Impeller diameter = 151 mm
40-160/4.0 – Impeller diameter = 166 mm

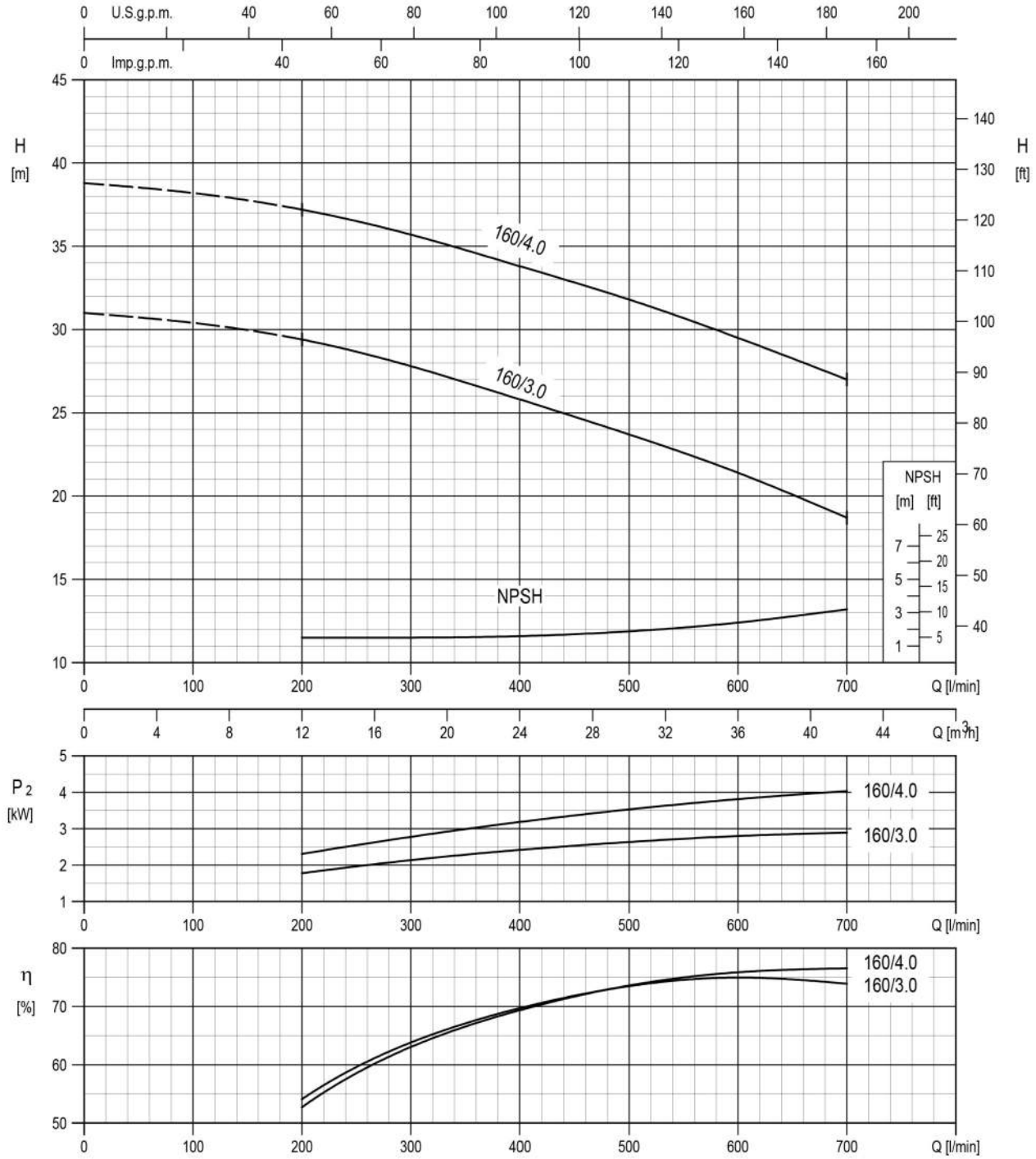

Rotation speed ≈ 2900 min^{-1}
Test standard: ISO 9906:2012 – Grade 3B

PERFORMANCE CURVES

50Hz

Rev.W

40-200/5.5 – Impeller diameter = 183 mm
40-200/7.5 – Impeller diameter = 200 mm
40-200/11 – Impeller diameter = 224 mm

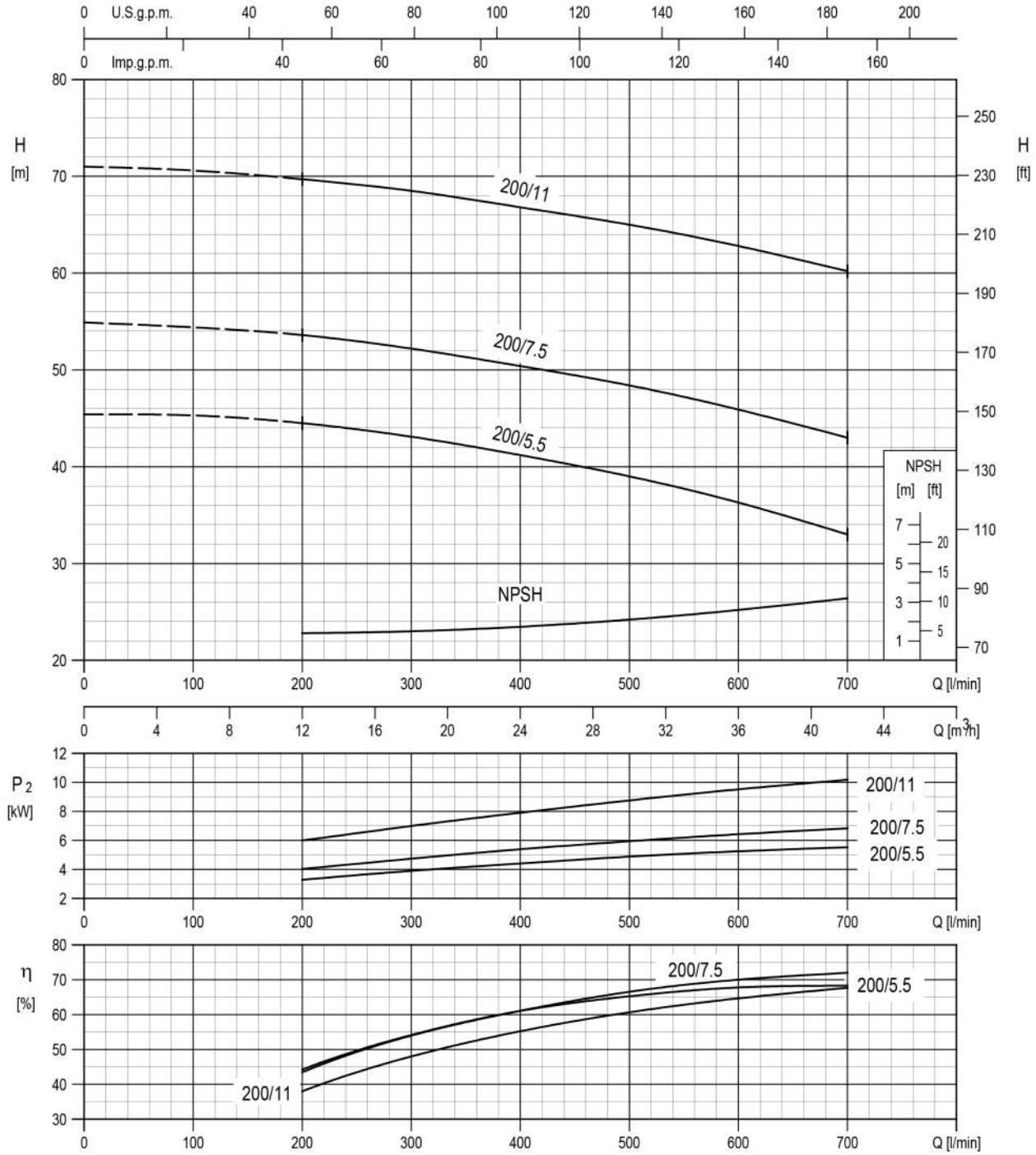

Rotation speed ≈ 2900 min^{-1}
Test standard: ISO 9906:2012 – Grade 3B

PERFORMANCE CURVES

50Hz

Rev.W

50-125/2.2 – Impeller diameter = 121 mm
50-125/3.0 – Impeller diameter = 131 mm
50-125/4.0 – Impeller diameter = 140 mm

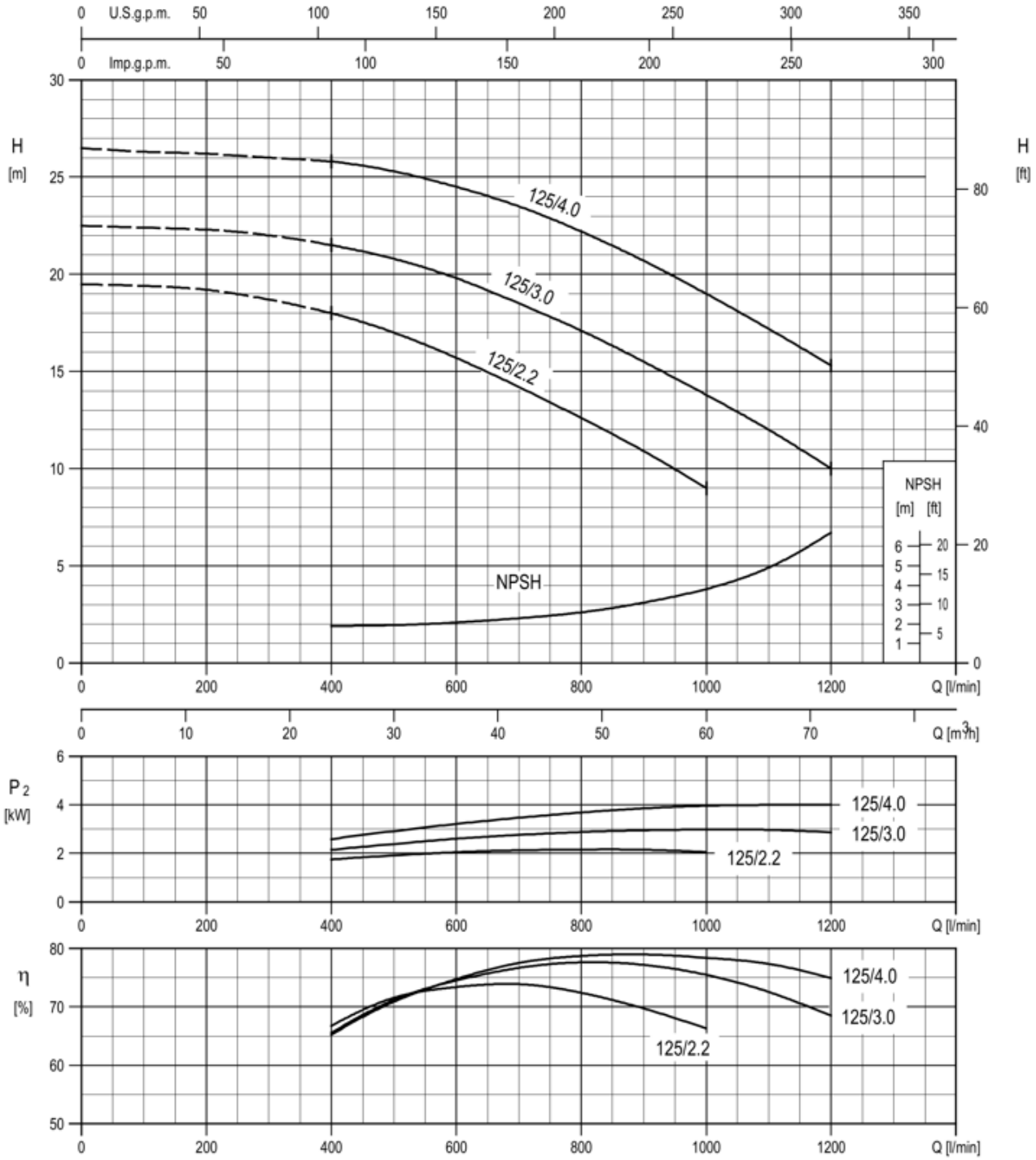

Rotation speed ≈ 2900 min^{-1}
Test standard: ISO 9906:2012 – Grade 3B

PERFORMANCE CURVES

50Hz

Rev.W

50-160/5.5 – Impeller diameter = 154 mm
50-160/7.5 – Impeller diameter = 166 mm

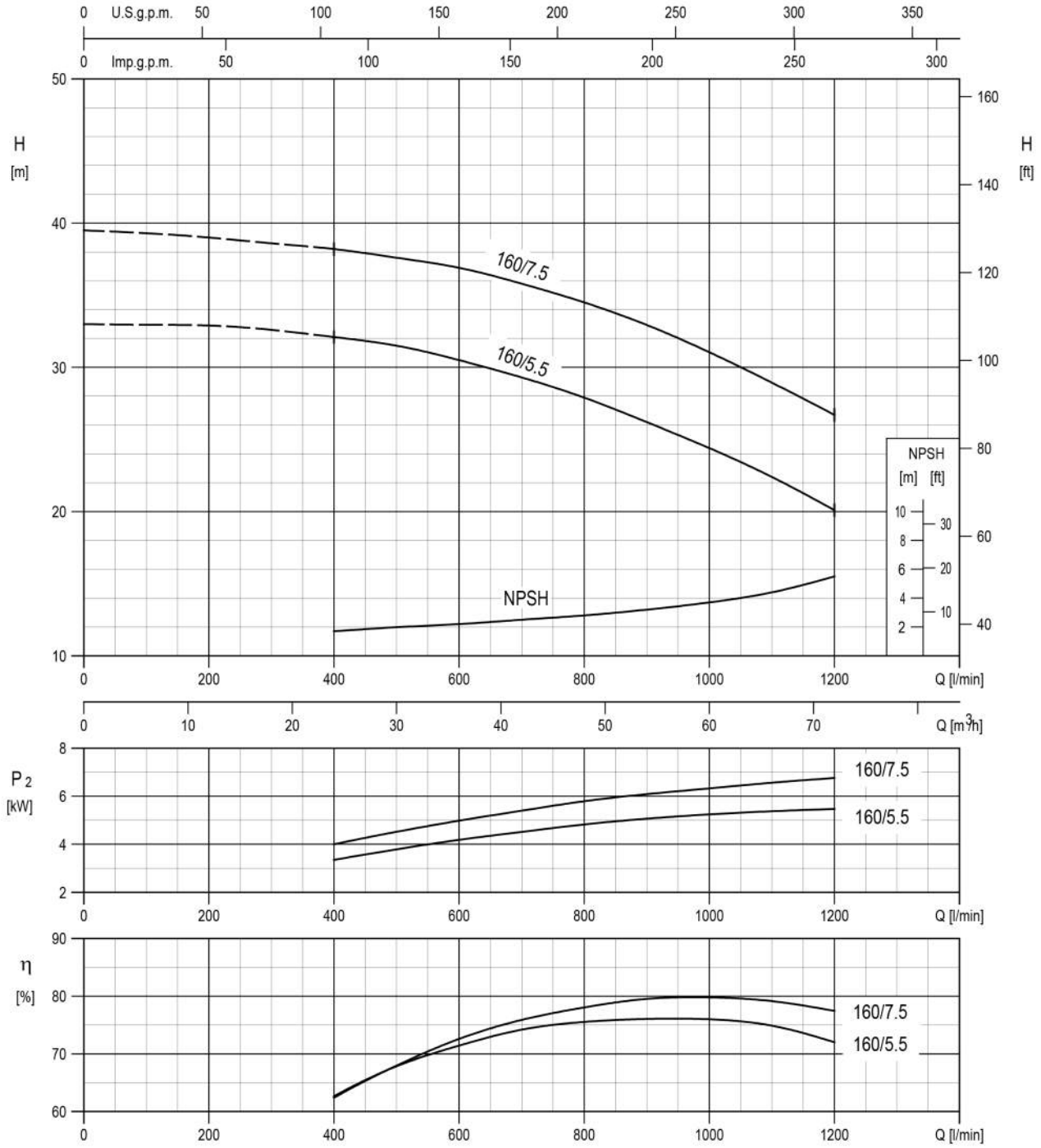

Rotation speed ≈ 2900 min^{-1}
Test standard: ISO 9906:2012 – Grade 3B

PERFORMANCE CURVES

50Hz

Rev.W

50-200/9.2 – Impeller diameter = 191 mm
50-200/11 – Impeller diameter = 200 mm
50-200/15 – Impeller diameter = 224 mm

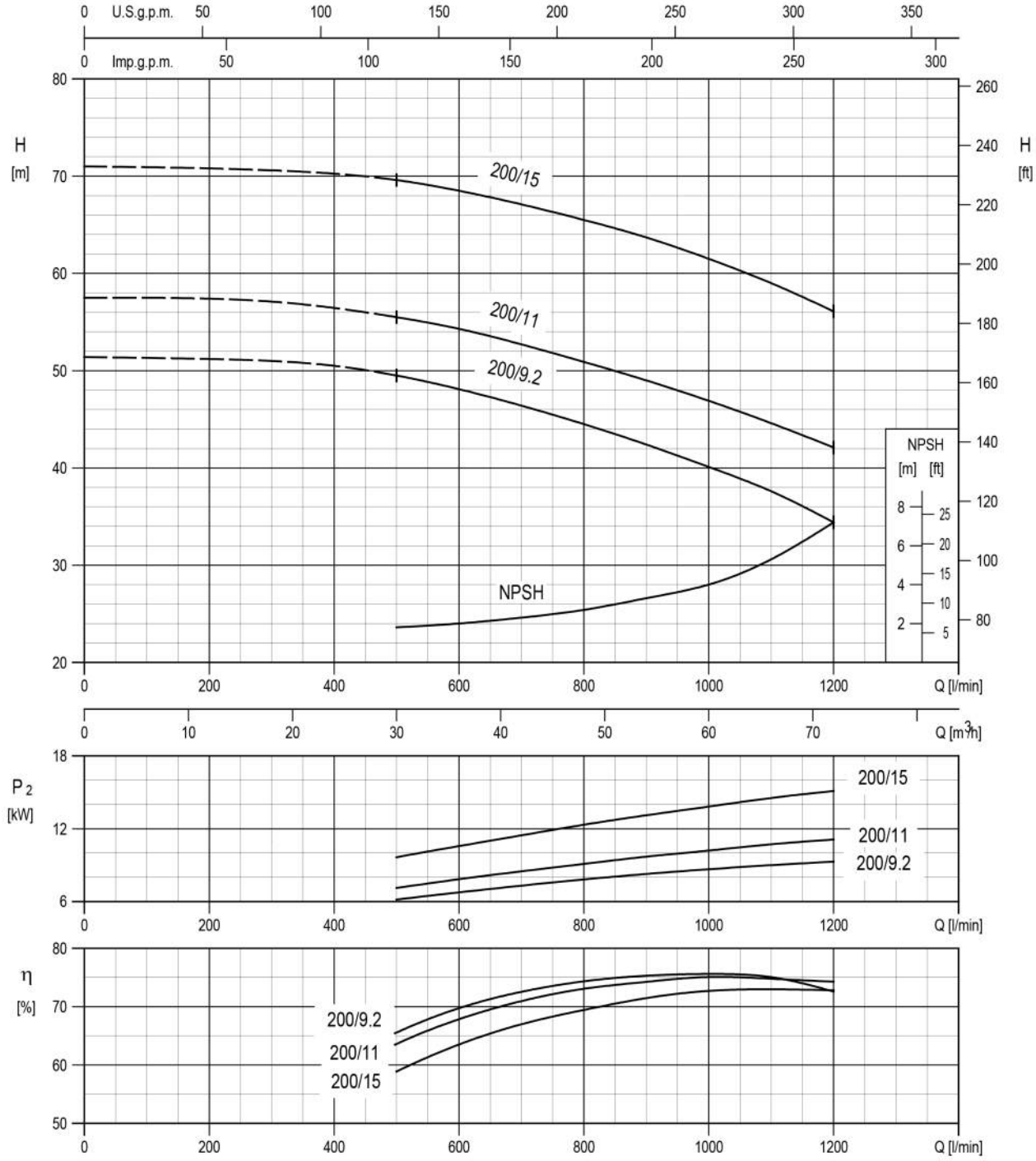

Rotation speed ≈ 2900 min^{-1}
Test standard: ISO 9906:2012 – Grade 3B

PERFORMANCE CURVES

50Hz

Rev.W

65-125/4.0 – Impeller diameter = 128 mm
65-125/5.5 – Impeller diameter = 138 mm
65-125/7.5 – Impeller diameter = 149 mm

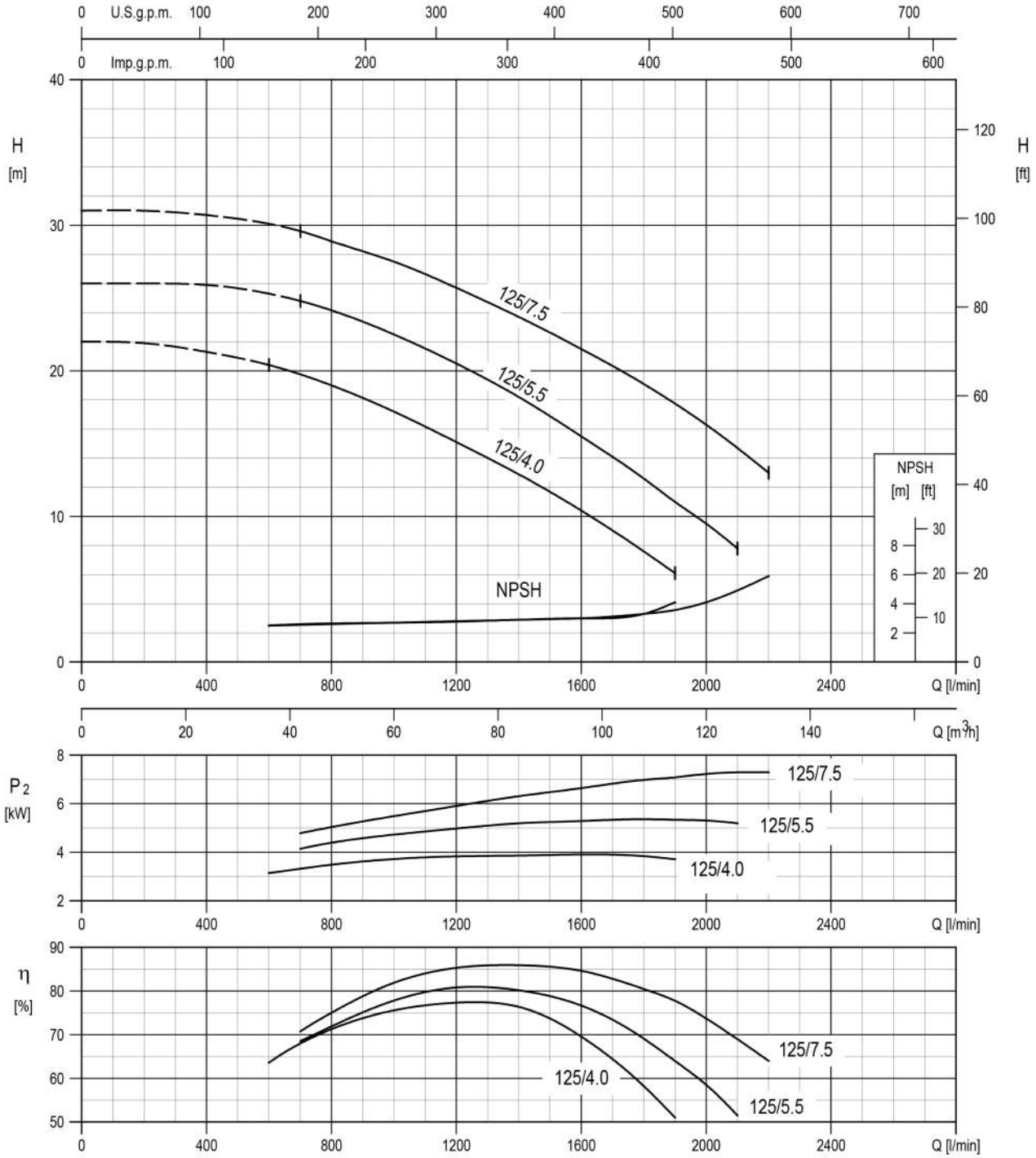

Rotation speed ≈ 2900 min^{-1}
Test standard: ISO 9906:2012 – Grade 3B

PERFORMANCE CURVES

50Hz

Rev.W

65-160/7.5 – Impeller diameter = 153 mm
65-160/9.2 – Impeller diameter = 160 mm
65-160/11 – Impeller diameter = 168 mm
65-160/15 – Impeller diameter = 178 mm

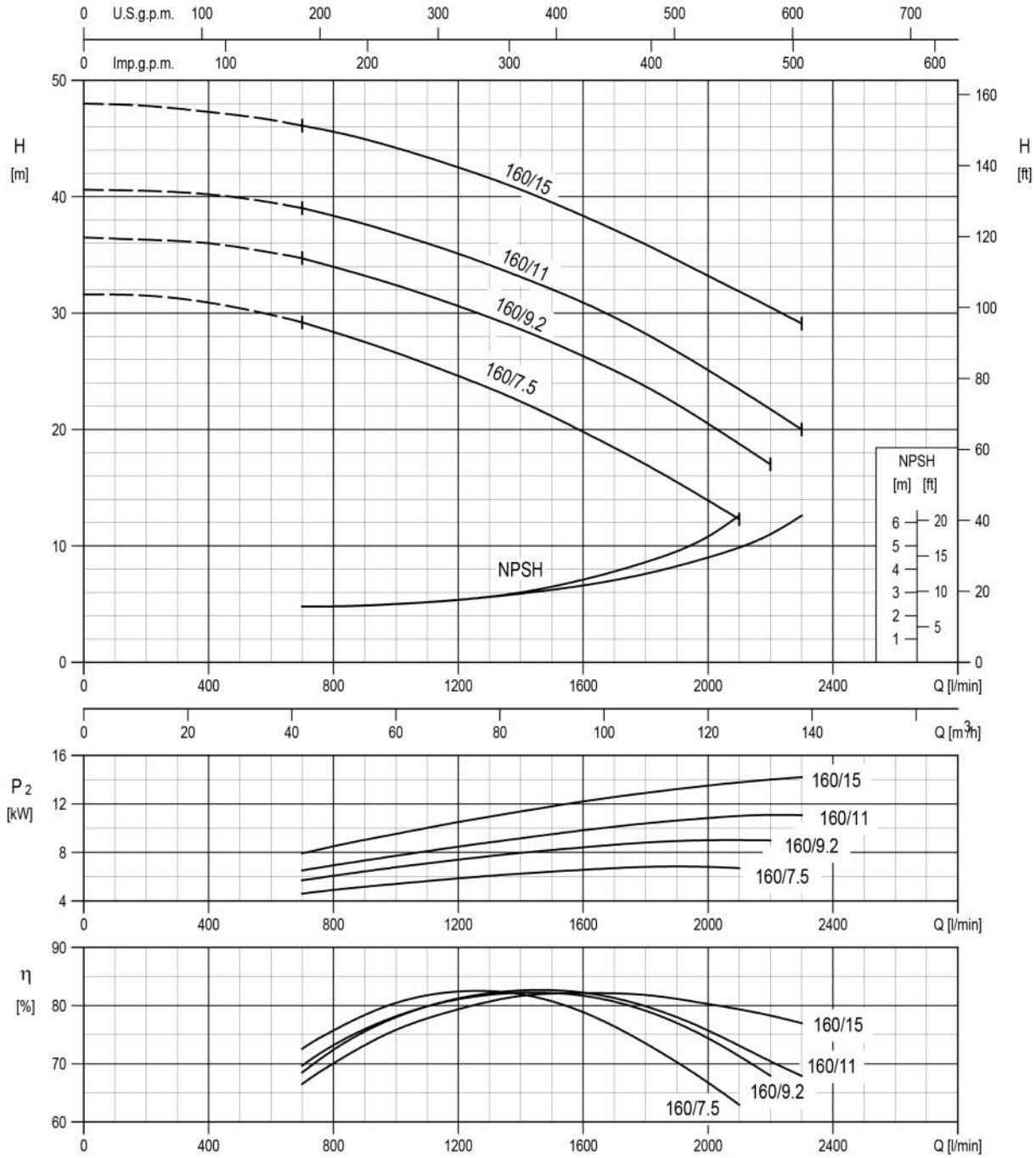

Rotation speed ≈ 2900 min^{-1}
Test standard: ISO 9906:2012 – Grade 3B

PERFORMANCE CURVES

50Hz

Rev.W

65-200/15 – Impeller diameter = 190 mm
65-200/18.5 – Impeller diameter = 201 mm
65-200/22 – Impeller diameter = 212 mm

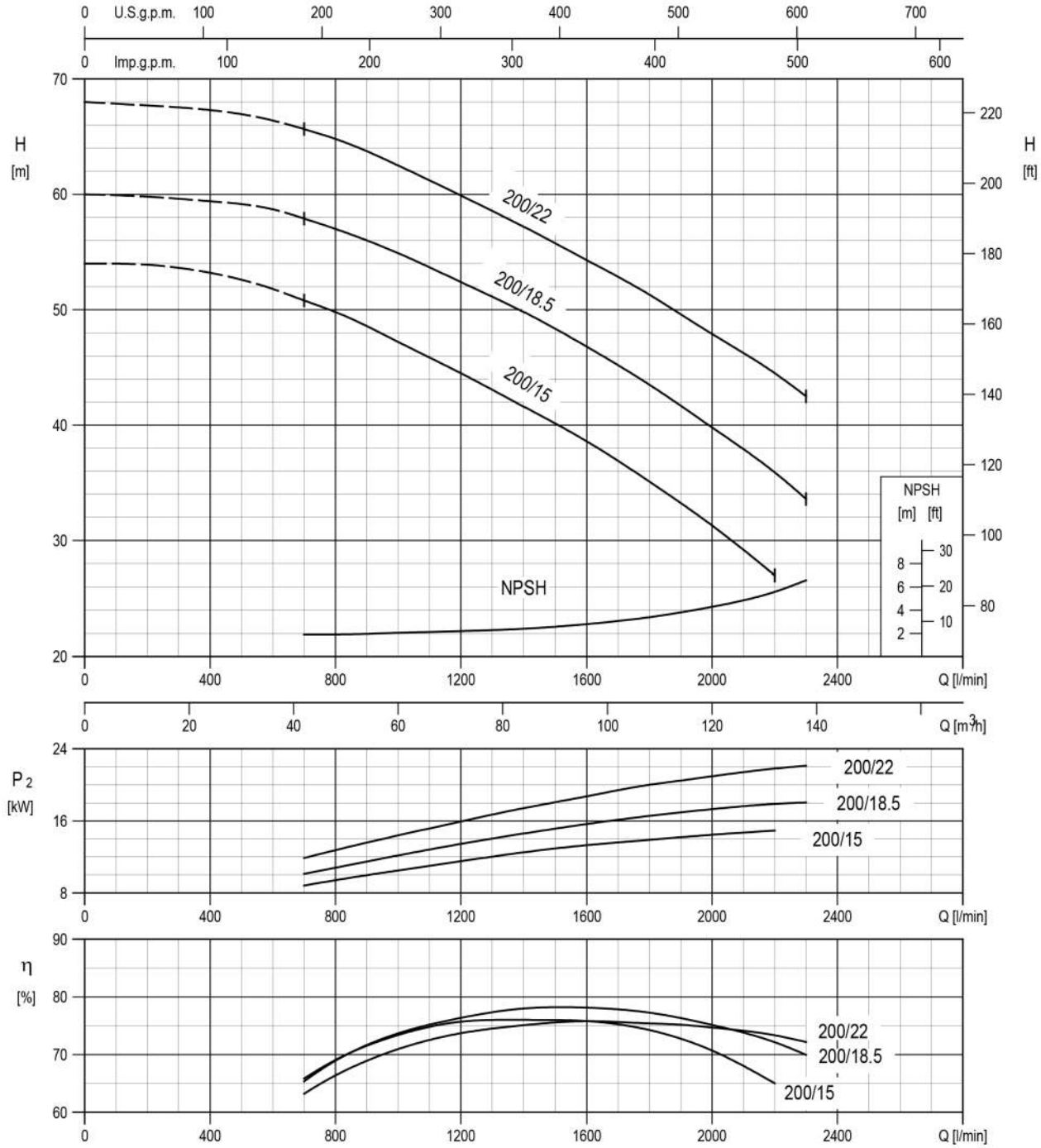

Rotation speed ≈ 2900 min^{-1}
Test standard: ISO 9906:2012 – Grade 3B

3D SECTIONAL VIEW DRAWING

UP TO 11 kW

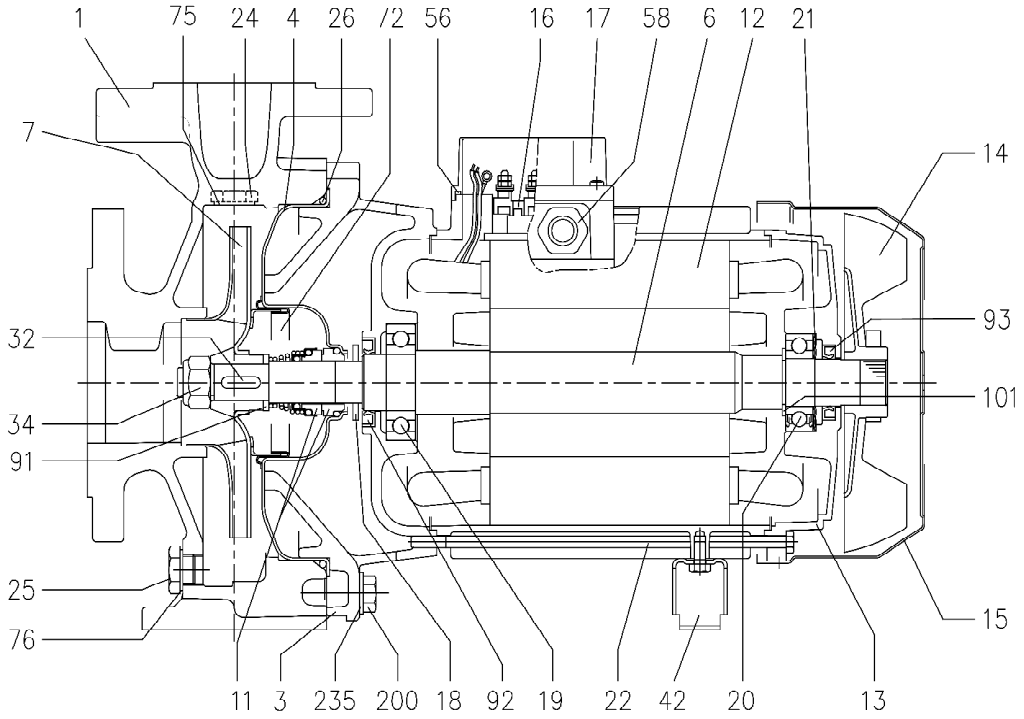

15 kW AND ABOVE

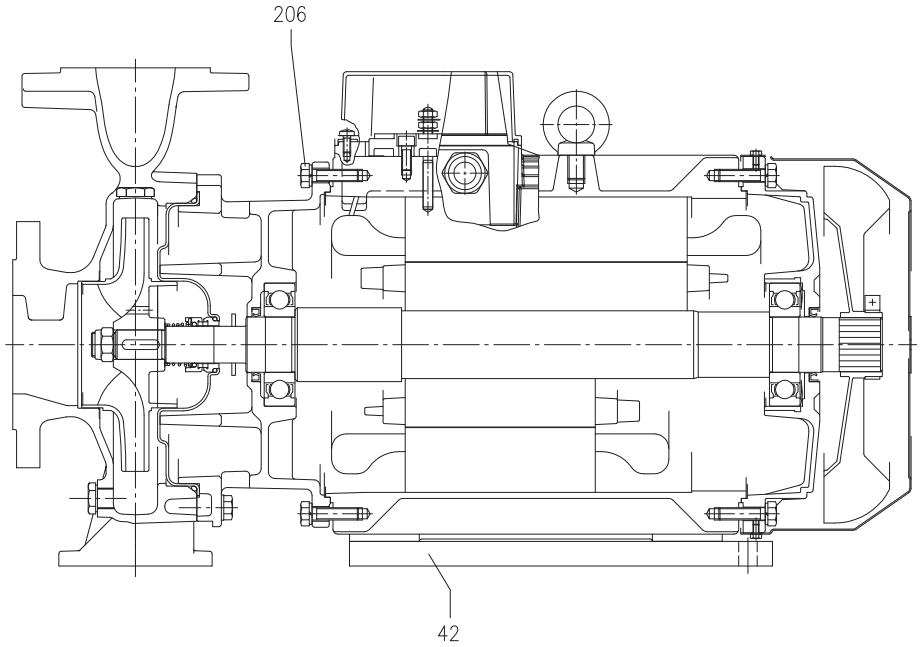

3D SECTIONAL VIEW TABLE

N°	PART NAME		MATERIAL	DIMENSIONS	STANDARD	Q.TY
1	Casing		Cast iron EN-GJL-250-EN 1561			1
3	Motor bracket [1]		-			1
4	Casing cover		EN 1.4301 (AISI 304)			1
6	Shaft with rotor - Wet extension		EN 1.4301 (AISI 304)			1
7	Impeller [2]		-			1
11	Mechanical seal [3]		-			1
12	Motor frame with stator		-			1
13	Motor cover		Aluminium			1
14	Fan		PA			1
15	Fan cover		Fe P04 Galvanized			1
16	Terminal		-			1
17	Terminal box cover		Aluminium (three phase version)			1
18	Splash ring	Up to 11 kW	NBR	40x21.5x2	EBARA DRAWING	1
		15 kW and above		50x29.5x3		
19	Bearing [10]		-			1
20	Bearing [10]		-			1
21	Adjusting ring		Steel C70			1
22	Tie rod	Up to 3 kW	Fe 42 Galvanized	M5	EBARA DRAWING	4
		For 4 - 5.5 - 7.5 kW		M6		
		9.2 e 11kW		M8		
	Screw	15 kW and above	Gv. Steel 8.8 strenght class ISO 898-1	M10x40	UNI 5739	
24	Priming plug		Brass	G 3/8" L=8		1
25	Draing plug		Brass	G 3/8" L=8		1
26	O-ring	32-125, 40-125	NBR/FPM/EPDM	158.11x5.34	OR 6625	1
		32-160, 40-160, 50-125, 65-125		183.52x5.34	OR 6720	
		32-200, 40-200,50-160, 50-200, 65-160, 65-200 [4]		227.96x5.34	OR 6895	
32	Key	Up to 11 kW	EN 1.4401 (AISI 316)	A 6x6x25	UNI 6604	1
		50-200/15				
		15 kW and above		A 8x7x30		
34	Impeller nut	Up to 11kW	EN 1.4301 (AISI 304)	M16x1.5	UNI 7474	1
		50-200/15		M18x1.5		
		15 kW and above		M20x1.5		
42	Foot		Aluminium / Galvanized steel		EBARA DRAWING	[5]
56	Box gasket		NBR			1
58	Cable gland		-			[6]
72	Casing ring [7]		EN 1.4301 (AISI 304)			1
75	Washer		Aluminum	22x17x1.5	EBARA DRAWING	1
76	Washer		Aluminum			1
91	Impeller spacer [11]		EN 1.4401 (AISI 316)			1
92	Lip seal	Up to 3kW	-	25x40x7	DIN 3760 without spring	1
		From 4 to 7.5 kW		30x47X7		
		From 9.2 kW to 11 kW		40x55x7		
		From 15 kW to 22 kW		45x60x7		
93	Lip seal	Up to 4 kW	-	25x40x7	DIN 3760 without spring	1
		From 5.5 kW to 7.5 kW		30x47X7		
		From 9.2 kW to 11 kW		40x55x7		
		From 15 kW to 22 kW		45x60x7		
101	Snap ring [8]		Carbon tool steels TC 80	Ø 40	UNI 7435	1
200	Screw	32-125, 40-125	Gv. Steel 8.8 strenght class ISO 898-1	M 8x30	UNI 5739	8
		32-160, 40-160, 50-125, 65-125		M 10x35		10
		32-200, 40-200, 50-160				12
		50-200, 65-160, 65-200				
235	Washer	32-125, 40-125	Galvanized Steel	8.4x17	UNI 6592	8
		32-160, 40-160, 50-125, 65-125		10.5x21		10
		32-200, 40-200, 50-160				12
		50-200, 65-160, 65-200				
206	Screw for bracket [9]		Gv. Steel 8.8 strenght class ISO 898-1	M 10x40	UNI 5739	4

[1] Cast iron EN-GJL-200-EN 1561 for 3D 32-200/3 and models with 15, 18.5, 22 kW motor
Aluminum AL-EN-1706-AC-46000-D for all the others;
[2] EN 1.4301 (AISI 304) for 32, 40, 50 series
EN 1.4401 (AISI 316) for 65 series;
[3] See **MECHANICAL SEAL** pages from 307 to 310
[4] See **MECHANICAL SEAL**, “O-ring” column, pages from 307 to 310
[5] 0 for 65-160/15 kW;
1 for pumps up to 11 kW
2 for 65-200/15, 18.5, 22 kW
[6] 1 for pumps with motor up to 11 kW
2 for pumps with 15 kW motor and above
[7] Only for: 32-200, 40-200, 50-160, 50-200/9.2, 50-200/11
[8] Only for pumps with 9.2 and 11 kW motor
[9] Only for pumps with 15 kW motor and above
[10] See **3D BEARINGS** page 311
[11] Only for 32-125/1.1

3DS 32, 40, 50 SECTIONAL VIEW DRAWING

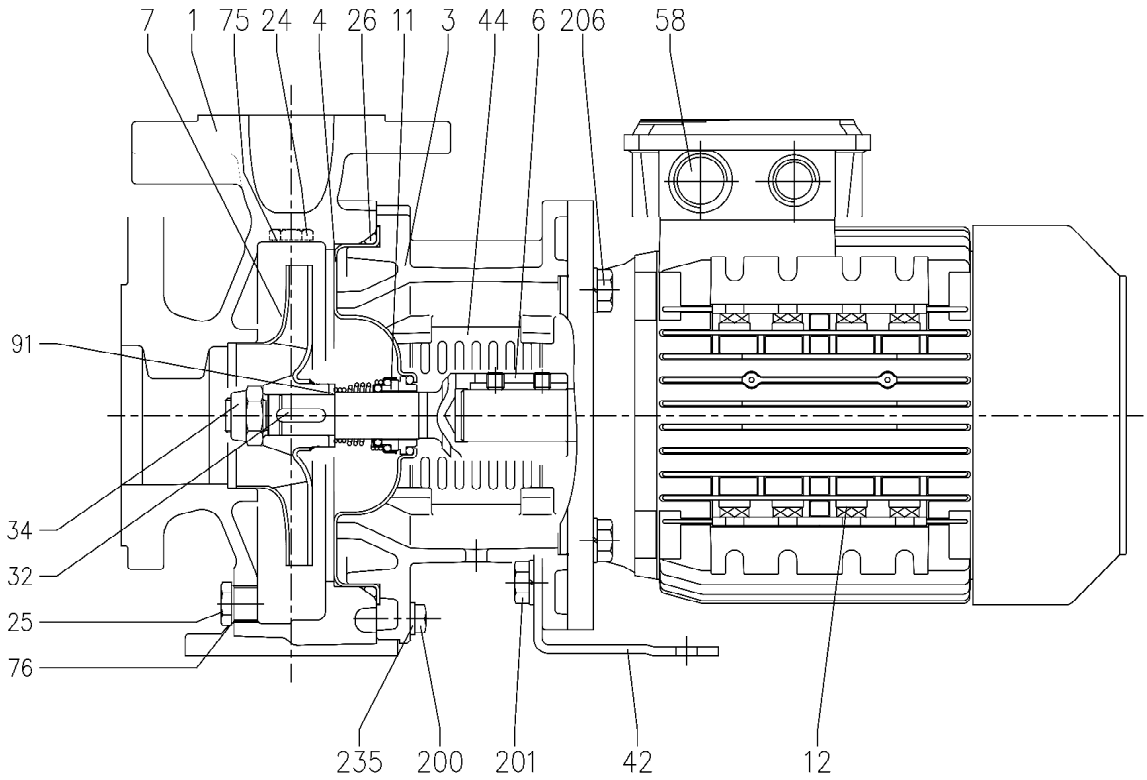

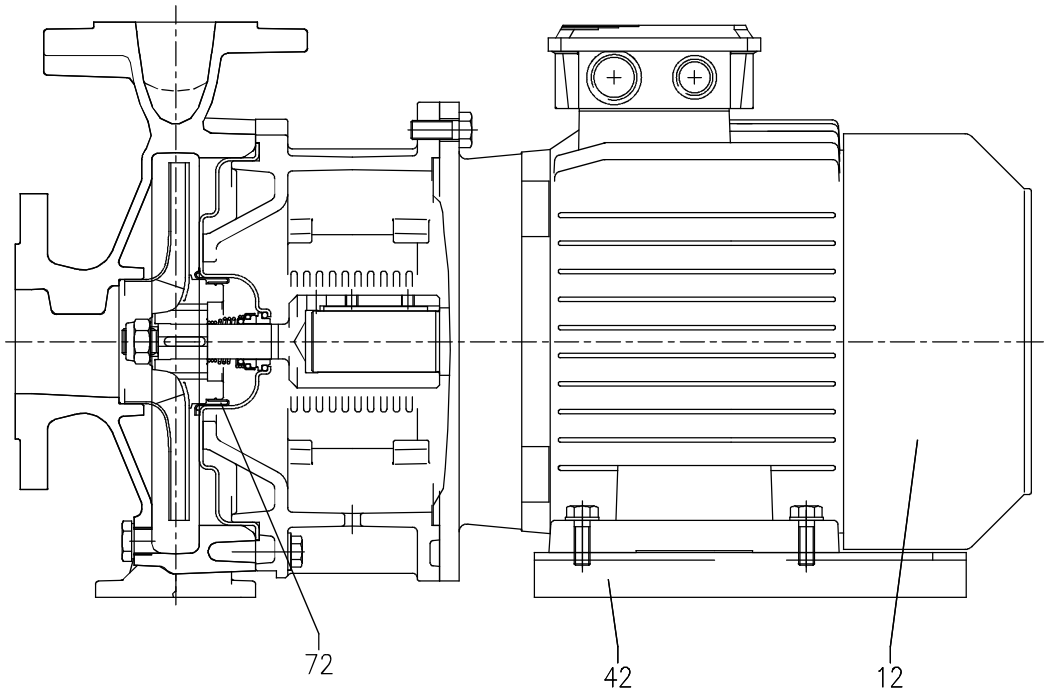

3DS 65 SECTIONAL VIEW DRAWING

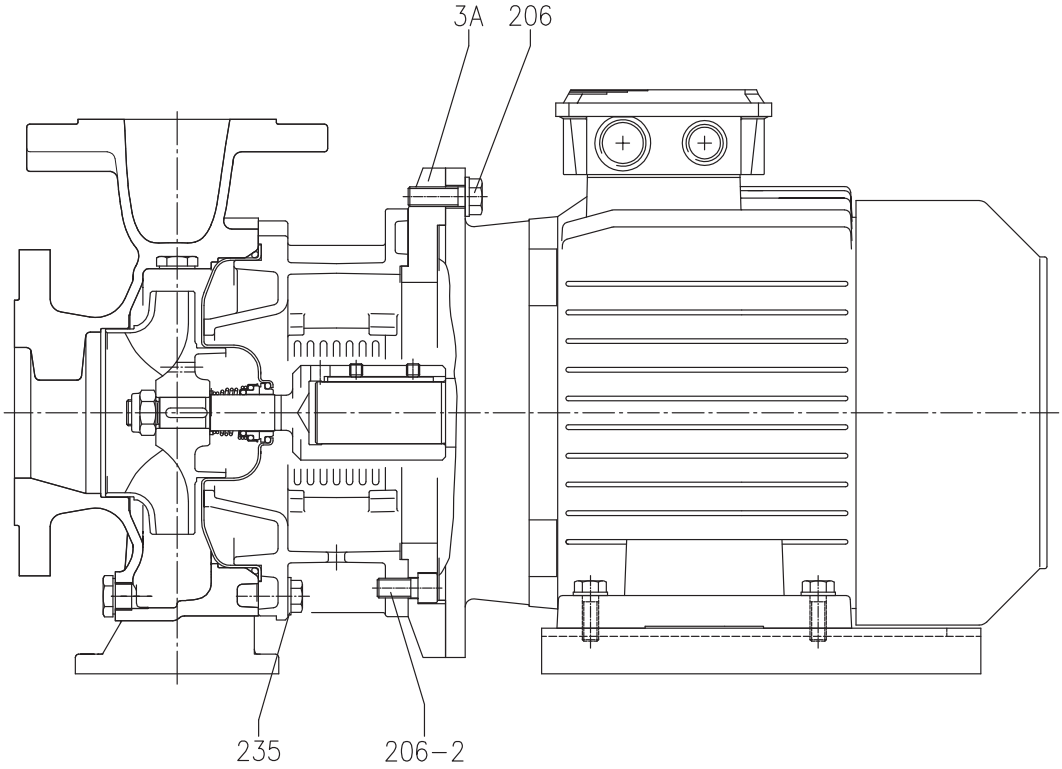

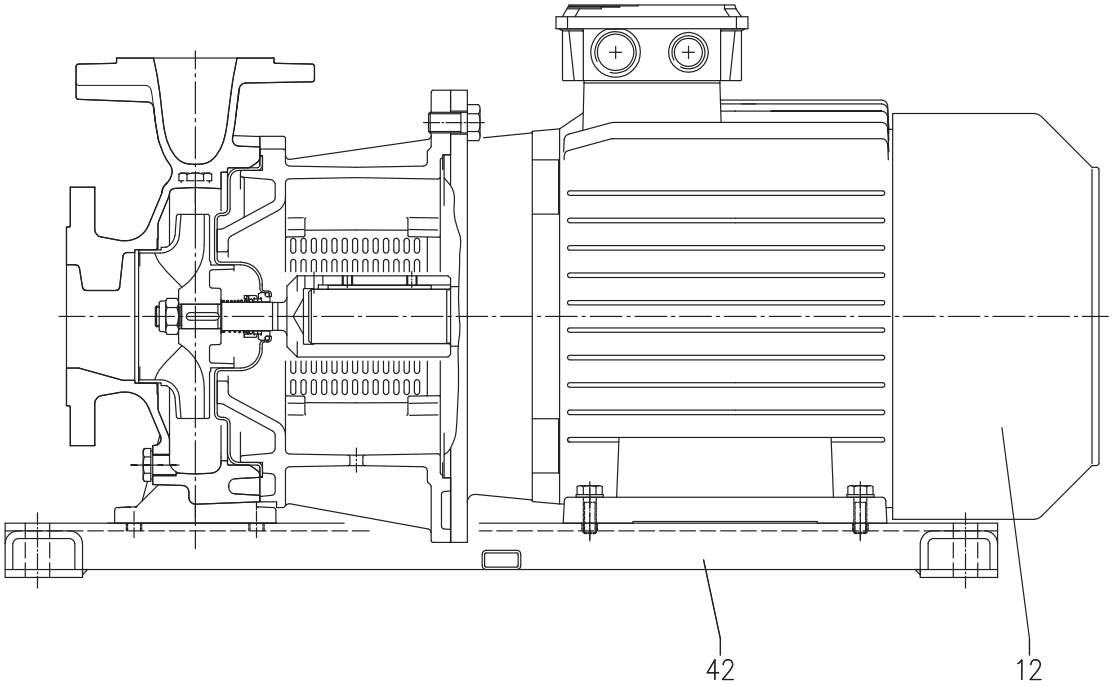

CONSTRUCTIONS

50Hz

Rev.W

3DS SECTIONAL VIEW TABLE

N°	PART NAME		MATERIAL	DIMENSIONS	STANDARD	Q.TY
1	Casing		Cast iron EN-GJL-250-EN 1561			1
3	Motor bracket		Cast iron EN-GJL-200-EN 1561			1
3A	Adapter ring	[1]	Cast iron EN-GJL-200-EN 1561			1
4	Casing cover		EN 1.4301 (AISI 304)			1
6	Coupling - Wet extensions	[8]	EN 1.4301 (AISI 304)			1
7	Impeller	[2]	-			1
11	Mechanical seal	[3]	-			1
12	Motor		-			1
24	Priming plug		Brass	G 3/8" L=8		1
25	Draing plug		Brass	G 3/8" L=8		1
26	O-ring	32-12540-125	NBR/FPM/EPDM	158.11x5.34	OR 6625	1
		32-160, 40-160, 50-125, 65-125 [4]		183.52x5.34	OR 6720	
		32-200, 40-200,50-160, 50-200, 65-160, 65-200		227.96x5.34	OR 6895	
32	Key	Up to 11 kW	EN 1.4401 (AISI 316)	6x6x25	UNI 6604	1
		50-200/15				
		15 kW and above		8x7x30		
34	Impeller nut	Up to 11kW	EN 1.4301 (AISI 304)	M16x1.5	UNI 7474	1
		50-200/15		M18x1.5		
		15 kW and above		M20x1.5		
42	Foot		Galvanized Steel			[5]
44	Protection		EN 1.4301 (AISI 304)		EBARA DRAWING	1
58	Cable gland		-			
72	Casing ring	[6]	EN 1.4301 (AISI 304)			1
75	Washer		Aluminum	22x17x1.5	EBARA DRAWING	1
76	Washer		Aluminum			1
91	Impeller spacer	[9]	EN 1.4401 (AISI 316)			1
200	Screw	32-125, 40-125	Gv. Steel 8.8 strenght class ISO 898-1	M8x30	UNI 5739	8
		32-160, 40-160, 50-125, 65-125		M10x35		10
		32-200, 40-200, 50-160, 50-200, 65-160, 65-200				12
201	Screw	[7]	Gv. Steel 8.8 strenght class ISO 898-1	M10x16	UNI 5739	2
206	Screw for bracket		Gv. Steel 8.8 strenght class ISO 898-1	M10x40	UNI 5739	4
206-2	Screw adapter ring	[1]	Gv. Steel 8.8 strenght class ISO 898-1	M12x20	UNI 5931	4
235	Washer	32-125, 40-125	Galvanized Steel	8.4x17	UNI 6592	8
		32-160, 40-160, 50-125, 65-125		10.5x21		10
		32-200, 40-200, 50-160, 50-200, 65-160, 65-200				12

[1] Only for 65-125/5.5 and 65-125/7.5
[2] EN 1.4301 (AISI 304) for 32, 40, 50 series;
EN 1.4401 (AISI 316) for 65 series
[3] See **MECHANICAL SEAL** pages from 307 to 310
[4] See **MECHANICAL SEAL**, “O-ring” column, pages from 307 to 310
[5] 0 for version 65-200/22
1 for version for 32, 40, 50, 65-125/5.5, 65-125/7.5, 65-160/11, 65-160/15, 65-200/15, 65-200/18.5
2 for version for 65-125/4, 65-160/7.5, 65-160/9.2
[6] Only for: 32-200, 40-200, 50-160, 50-200
[7] Only for version 32-125/1.1, 32-160/1.5, 32-160/2.2, 40-125/1.5, 40-125/2.2, 50-125/2.2
[8] See **3DS COUPLING** page 313
[9] Only for 32-125/1.1

3DP SECTIONAL VIEW DRAWING

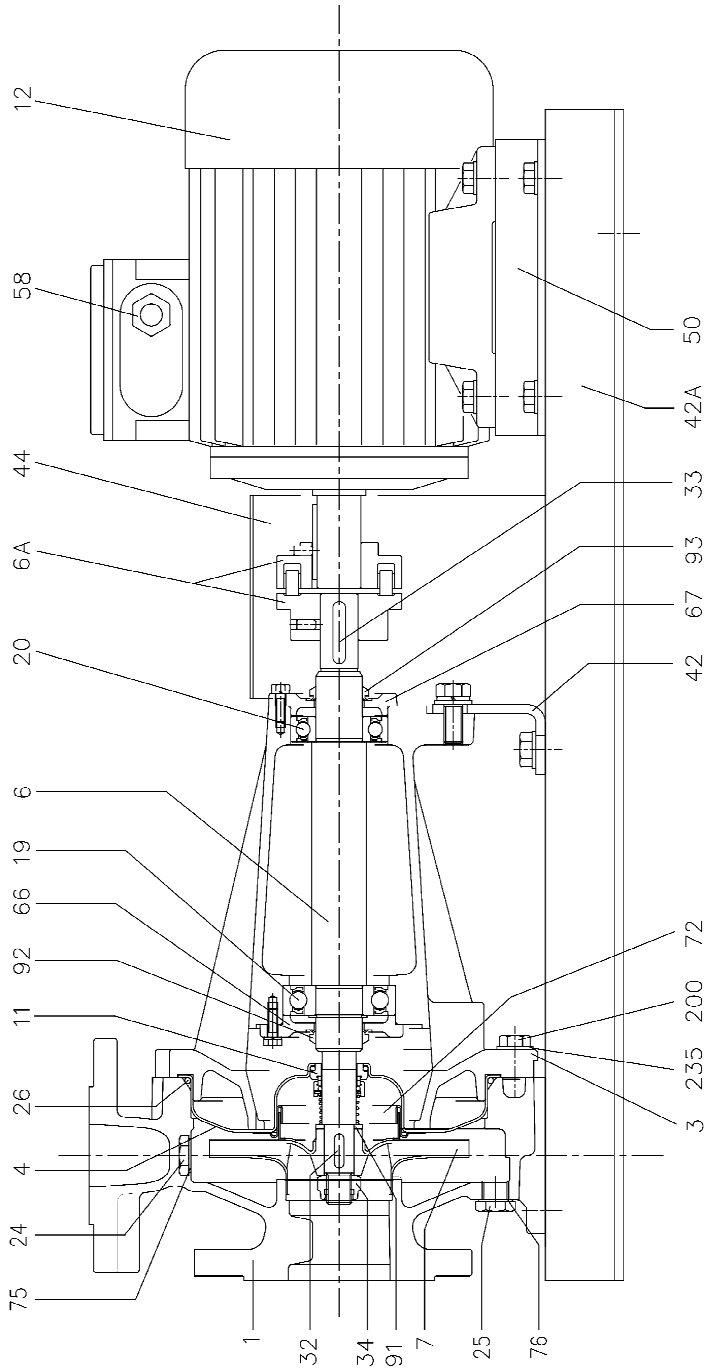

3DP SECTIONAL VIEW TABLE

N°	PART NAME		MATERIAL	DIMENSIONS	STANDARD	Q.TY
1	Casing		Cast iron EN-GJL-250-EN 1561			1
3	Support		Cast iron EN-GJL-200-EN 1561			1
4	Casing cover		EN 1.4301 (AISI 304)			1
6	Shaft - Wet extension		EN 1.4301 (AISI 304)			1
6A	Flexible coupling	[5]	Cast iron EN-GJL-250-EN 1561			1
7	Impeller	[1]	-			1
11	Mechanical seal	[2]	-			1
12	Motor		-			1
19	Bearing	[6]	-			1
20	Bearing	[6]	-			1
24	Priming plug		Brass	G 3/8" L=8	DIN 906	1
25	Draing plug		Brass	G 3/8" L=8	DIN 906	1
26	O-ring	32-125, 40-125 [3]	NBR/FPM/EPDM	158.11x5.34	OR 6625	1
		32-160, 40-160, 50-125, 65-125		183.52x5.34	OR 6720	
		32-200, 40-200, 50-160, 50-200, 65-160, 65-200		227.96x5.34	OR 6895	
32	Key	Up to 11 kW 50-200/15	EN 1.4401 (AISI 316)	6x6x25	UNI 6604	1
		15 kW and above		8x7x30		
33	Key		C 40	8x7x40	UNI 6604	1
34	Impeller nut	Up to 11kW 50-200/15	EN 1.4301 (AISI 304)	M16x1.5	UNI 7474	1
		15 kW and above		M18x1.5		
				M20x1.5		
42	Pump support		Fe 37 Galvanized		EBARA DRAWING	1
42A	Base		Fe 37 Galvanized			1
44	Protection		Fe 37 Galvanized			1
50	Foot		Aluminium / Galvanized steel			1
58	Cable gland		-			1
66	Impeller side bearing cover		Cast iron EN-GJL-200-EN 1561			1
67	Motor side bearing cover		Cast iron EN-GJL-200-EN 1561			1
72	Casing ring	[4]	EN 1.4301 (AISI 304)			1
75	Washer		Aluminum	22x17x1.5	EBARA DRAWING	1
76	Washer		Aluminum	22x17x1.5	EBARA DRAWING	1
91	Impeller spacer	[7]	EN 1.4401 (AISI 316)			1
92	"V" ring		-	VS - 0030		1
93	"V" ring		-	VS - 0030		1
200	Screw	32-125, 40-125	Gv. Steel 8.8 strenght class ISO 898-1	M 8x30	UNI 5739	8
		32-160, 40-160, 50-125, 65-125		M 10x35		10
		32-200, 40-200, 50-160 50-200, 65-160, 65-200				12
235	Washer	32-125, 40-125	Galvanized Steel	8.4x17	UNI 6592	8
		32-160, 40-160, 50-125, 65-125		10.5x21		10
		32-200, 40-200, 50-160 50-200, 65-160, 65-200				12

[1] EN 1.4301 (AISI 304) for 32, 40, 50 series;
EN 1.4401 (AISI 316) for 65 series
[2] See **MECHANICAL SEAL** pages from 307 to 310
[3] See **MECHANICAL SEAL**, “O-ring” column, pages from 307 to 310
[4] Only for: 32-200, 40-200, 50-160, 50-200
[5] See **3DP FLEXIBLE COUPLING** page 314
[6] See **3DP BEARINGS** page 312
[7] Only for 32-125/1.1

MECHANICAL SEAL

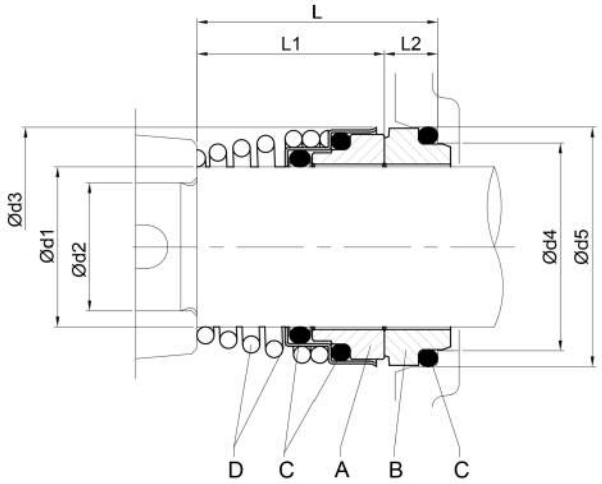

	Pump type	Dimensions [mm] d1	d2	d3	d4	d5	L	L1	L2	Material A Rotary seal ring	B Stationary seal ring	C O-ring	D Frame + Spring
STANDARD	32-125/160/200 40-125/160/200 50-125/160/200 65-125 65-160/7.5-9.2-11	22	19	38	31	37	37.5	27.5	10	Ceramic	Carbon	NBR	EN 1.4301 (AISI 304)
	65-160/15 65-200	30	24	46	39	45	42.5	32.5	10				EN 1.4401 (AISI 316)

	Version	Pump type	Dimensions [mm] d1	d2	d3	d4	d5	L	L1	L2	Material A Rotary seal ring	B Stationary seal ring	C O-ring	D Frame + Spring
OPTIONAL	H	32-125/160/200 40-125/160/200 50-125/160/200 65-125 65-160/7.5-9.2-11	22	19	38	31	37	37.5	27.5	10	Ceramic	Carbon	FPM	EN 1.4401 (AISI 316)
		65-160/15 65-200	30	24	46	39	45	42.5	32.5	10				
	E	32-125/160/200 40-125/160/200 50-125/160/200 65-125 65-160/7.5-9.2-11	22	19	38	31	37	37.5	27.5	10			EPDM	
		65-160/15 65-200	30	24	46	39	45	42.5	32.5	10				

	Version	Pump type	Dimensions [mm] d1	d2	d3	d4	d5	L	L1	L2	Material A Rotary seal ring	B Stationary seal ring	C O-ring	D Frame + Spring
SPECIAL	U3U3EGG	65-160/15 65-200	30	24	46	39	45	42.5	32.5	10	Tungsten carbide	Tungsten carbide	EPDM	EN 1.4401 (AISI 316)
	U3CEGG	65-160/15 65-200										Carbon		
	Q1Q1EGG	65-160/15 65-200									SiC	SiC		
	Q1U3EGG	65-160/15 65-200										Tungsten carbide		
	Q1AEGG	65-160/15 65-200										Carbon metalized		
		32-125/160/200 40-125/160/200 50-125/160/200 65-125 65-160/7.5-9.2-11	22	19	38	31	37	37.5	27.5	10				

CONSTRUCTIONS

50Hz

Rev.W

MECHANICAL SEAL

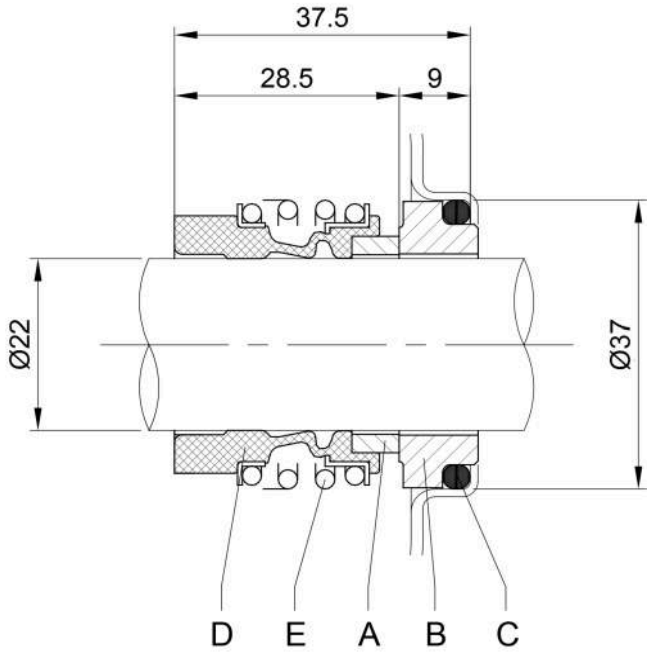

	Version	Pump type	Material A Rotary seal ring	B Stationary seal ring	C O-ring	D Bellows	E Frame + Spring
	HS	32-125/160/200 40-125/160/200 50-125/160/200 65-125 65-160/7.5-9.2-11	SiC	SiC	FPM	FPM	EN 1.4401 (AISI 316)
OPTIONAL	HW	32-125/160/200 40-125/160/200 50-125/160/200 65-125 65-160/7.5-9.2-11	Tungsten Carbide	Tungsten Carbide	FPM	FPM	EN 1.4401 (AISI 316)

CONSTRUCTIONS

50Hz

Rev.W

MECHANICAL SEAL

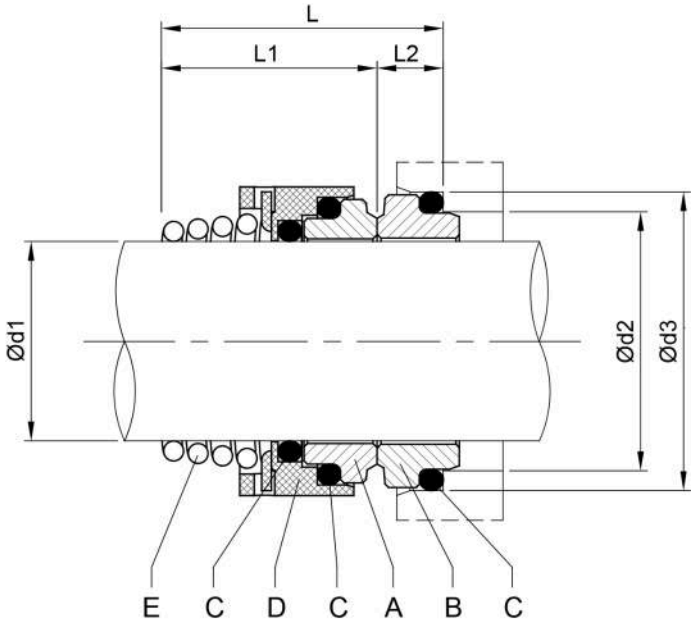

OPTIONAL

Version	Pump type	Dimensions [mm]						Material				
		d1	d2	d3	L	L1	L2	A Rotary seal ring	B Stationary seal ring	C O-ring	D Bellows	E Frame + Spring
HS	65-160/15 65-200	30	39	45	42.5	31	11.5	SiC	SiC	FPM	FPM	EN 1.4401 (AISI 316)
HW	65-160/15 65-200	30	39	45	42.5	32.5	10	Tungsten Carbide	Tungsten Carbide			
HSW	32-125/160/200 40-125/160/200 50-125/160/200 65-125 65-160/7.5-9.2-11	22	31	37	37.5	27.5	10	SiC				

SPECIAL

Version	Pump type	Dimensions [mm]						Material				
		d1	d2	d3	L	L1	L2	A Rotary seal ring	B Stationary seal ring	C O-ring	D Bellows	E Frame + Spring
U3U3EGG	32-125/160/200 40-125/160/200 50-125/160/200 65-125 65-160/7.5-9.2-11	22	39	45	42.5	31	11.5	Tungsten Carbide	Tungsten Carbide	EPDM	EPDM	EN 1.4401 (AISI 316)
U3CEGG	32-125/160/200 40-125/160/200 50-125/160/200 65-125 65-160/7.5-9.2-11	22	31	37	37.5	27.5	10		Carbon			
Q1U3EGG	32-125/160/200 40-125/160/200 50-125/160/200 65-125 65-160/7.5-9.2-11							SiC	Tungsten Carbide			

MECHANICAL SEAL

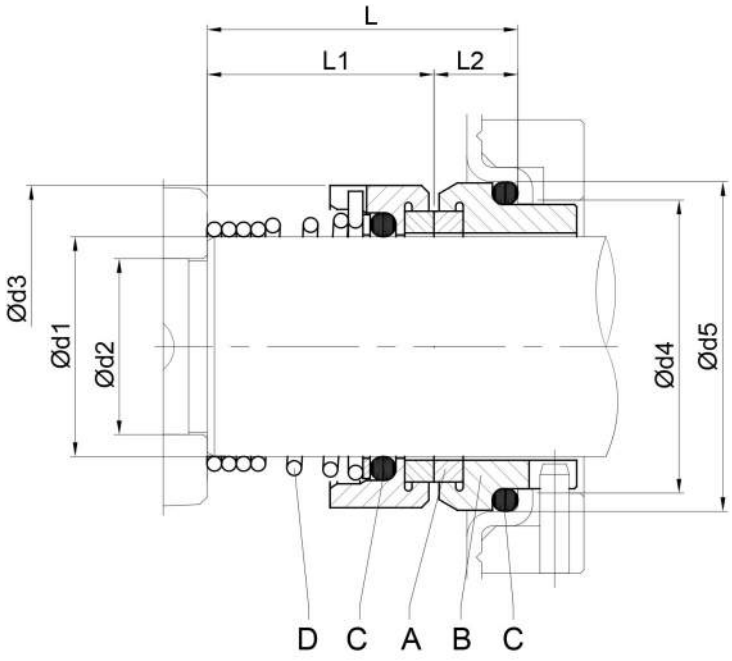

	Version	Pump type	Dimensions [mm]								Material			
			d1	d2	d3	d4	d5	L	L1	L2	A Rotary seal ring	B Stationary seal ring	C O-ring	D Frame + Spring
SPECIAL	Q1Q1EGG	32-125/160/200 40-125/160/200 50-125/160/200 65-125 65-160/7.5-9.2-11	22	19	38	31	37	37.5	27.5	10	SiC	SiC	EPDM	EN 1.4401 (AISI 316)

FLUID TEMPERATURE RANGE

The maximum allowable temperature for the pumped fluid is a determining factor for the operational life of the pump. A primary role in this limitation is played by the materials of the mechanical seals (rings and elastomers), whose thermal resistance often defines the upper limit. The general construction materials of the pump (casing, impeller) and the lubricant used also contribute to defining the maximum temperature. Although the fluid properties and operating conditions have an impact, the choice of suitable seal materials for the operating temperature is crucial to prevent leaks and ensure the reliability of the pumping system.

To preserve optimal performance and prevent failures, we recommend to operate within the following limits:

STANDARD	TEMPERATURE	
mechanical seal	MIN	MAX
STANDARD	-5 °C	90 °C

OPTIONAL	TEMPERATURE	
mechanical seal	MIN	MAX
H *	-5 °C	110 °C
HS *	-5 °C	110 °C
HW *	-5 °C	110 °C
HSW *	-5 °C	110 °C
E	-5 °C	120 °C

SPECIAL	TEMPERATURE	
mechanical seal	MIN	MAX
U3U3EGG	-5 °C	120 °C
U3CEGG	-5 °C	120 °C
Q1Q1EGG	-5 °C	120 °C
Q1U3EGG	-5 °C	120 °C
Q1AEGG	-5 °C	120 °C

* in case the pumped fluid is water in combination to FPM elastomers, a maximum temperature fluid of 75°C is recommended in order to guarantee a longer life of the sealing parts

3D BEARINGS

Pump type	Ball bearing	
	Pump side	Fan side
3D 32-125/1.1	6205	6203
3D 32-160/1.5		
3D 32-160/2.2		
3D 32-200/3.0		6205
3D 32-200/4.0	6206	
3D 32-200/7.5	6306	6206
3D 40-125/1.5	6205	6203
3D 40-125/2.2		
3D 40-160/3.0		6205
3D 40-160/4.0	6206	
3D 40-200/5.5	6306	6206
3D 40-200/7.5		
3D 40-200/11	6308	6208
3D 50-125/2.2	6205	6203
3D 50-125/3.0		6205
3D 50-125/4.0	6206	
3D 50-160/5.5	6306	6206
3D 50-160/7.5		
3D 50-200/9.2	6308	6208
3D 50-200/11		
3D 50-200/15	6309	6309
3D 65-125/4.0	6206	6205
3D 65-125/5.5	6306	6206
3D 65-160/7.5		
3D 65-160/9.2	6308	6208
3D 65-160/11		
3D 65-160/15	6309	6309
3D 65-200/15		
3D 65-200/18.5		
3D 65-200/22		

CONSTRUCTIONS

50Hz

Rev.W

3DS-3DP BEARINGS

Pump type	Ball bearing	
	Pump side	Fan side
3DS 32-125/1.1	6204	6204
3DS 32-160/1.5	6205	6205
3DS 32-160/2.2		
3DS 32-200/3.0	6206	6206
3DS 32-200/4.0	6306	6306
3DS 32-200/7.5	6208	6208
3DS 40-125/1.5	6205	6205
3DS 40-125/2.2		
3DS 40-160/3.0	6206	6206
3DS 40-160/4.0	6306	6306
3DS 40-200/5.5	6208	6208
3DS 40-200/7.5		
3DS 40-200/11	6309	6309
3DS 50-125/2.2	6205	6205
3DS 50-125/3.0	6206	6206
3DS 50-125/4.0	6306	6306
3DS 50-160/5.5	6208	6208
3DS 50-160/7.5		
3DS 50-200/9.2		
3DS 50-200/11	6309	6309
3DS 50-200/15		
3DS 65-125/4.0	6306	6306
3DS 65-125/5.5	6208	6208
3DS 65-125/7.5		
3DS 65-160/7.5		
3DS 65-160/9.2		
3DS 65-160/11	6309	6309
3DS 65-160/15		
3DS 65-200/15		
3DS 65-200/18.5		
3DS 65-200/22 [1]	6311	6311

Pump type	Ball bearing			
	Pump		Motor	
	Pump side	Motor side	Pump side	Fan side
3DP 32-125/1.1	6306	6206	6204	6204
3DP 32-160/1.5			6205	6205
3DP 32-160/2.2				
3DP 32-200/3.0	6308	6306	6206	6206
3DP 32-200/4.0			6306	6306
3DP 32-200/7.5			6208	6208
3DP 40-125/1.5	6306	6206	6205	6205
3DP 40-125/2.2				
3DP 40-160/3.0			6206	6206
3DP 40-160/4.0			6306	6306
3DP 40-200/5.5	6308	6306	6208	6208
3DP 40-200/7.5				
3DP 40-200/11			6309	6309
3DP 50-125/2.2	6306	6206	6205	6205
3DP 50-125/3.0			6206	6206
3DP 50-125/4.0			6306	6306
3DP 50-160/5.5	6308	6306	6208	6208
3DP 50-160/7.5				
3DP 50-200/9.2				
3DP 50-200/11			6309	6309
3DP 50-200/15				
3DP 65-125/4.0	6306	6206	6306	6306
3DP 65-125/5.5			6208	6208
3DP 65-125/7.5				
3DP 65-160/7.5	6308	6306		
3DP 65-160/9.2				
3DP 65-160/11			6309	6309
3DP 65-160/15				
3DP 65-200/15				
3DP 65-200/18.5				
3DP 65-200/22 [1]			6311	6311

[1] Motor available with lubrificator for regular re-greasing of bearing.

3DS COUPLING

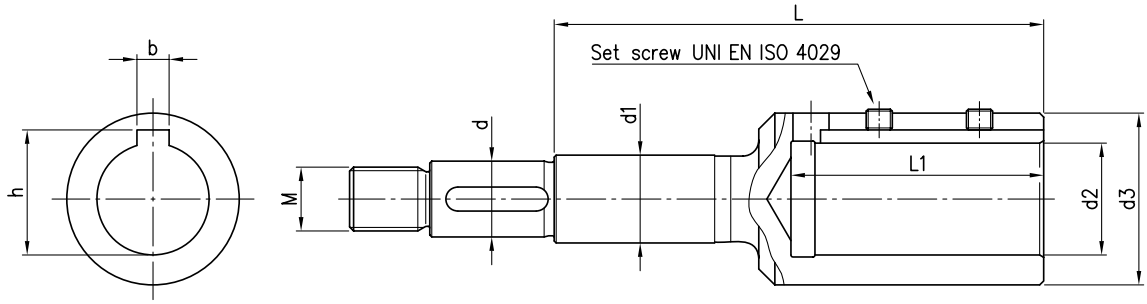

Pump type	Power [kW]	Power [HP]	Motor Size	Dimensions [mm] d	d1	d2	d3	M	L	L1	b	h	Set screw
32-125/1.1	1.1	1.5	80	19	22	19	33	M16x1.5	98	43	6	21.8	M6x6
32-160/1.5	1.5	2	90	19	22	24	39	M16x1.5	110	53	8	27.3	M8x8
32-160/2.2	2.2	3	90	19	22	24	39	M16x1.5	110	53	8	27.3	M8x8
32-200/3.0	3	4	100	19	22	28	43	M16x1.5	122	63	8	31.3	M8x8
32-200/4.0	4	5.5	112	19	22	28	43	M16x1.5	122	63	8	31.3	M8x8
32-200/7.5	7.5	10	132	19	22	38	58	M16x1.5	145	84	10	41.3	M8x8
40-125/1.5	1.5	2	90	19	22	24	39	M16x1.5	110	53	8	27.3	M8x8
40-125/2.2	2.2	3	90	19	22	24	39	M16x1.5	110	53	8	27.3	M8x8
40-160/3.0	3	4	100	19	22	28	43	M16x1.5	122	63	8	31.3	M8x8
40-160/4.0	4	5.5	112	19	22	28	43	M16x1.5	122	63	8	31.3	M8x8
40-200/5.5	5.5	7.5	132	19	22	38	58	M16x1.5	145	84	10	41.3	M8x8
40-200/7.5	7.5	10	132	19	22	38	58	M16x1.5	145	84	10	41.3	M8x8
40-200/11	11	15	160	19	22	42	63	M16x1.5	178	114	12	45.3	M8x8
50-125/2.2	2.2	3	90	19	22	24	39	M16x1.5	110	53	8	27.3	M8x8
50-125/3.0	3	4	100	19	22	28	43	M16x1.5	122	63	8	31.3	M8x8
50-125/4.0	4	5.5	112	19	22	28	43	M16x1.5	122	63	8	31.3	M8x8
50-160/5.5	5.5	7.5	132	19	22	38	58	M16x1.5	145	84	10	41.3	M8x8
50-160/7.5	7.5	10	132	19	22	38	58	M16x1.5	145	84	10	41.3	M8x8
50-200/9.2	9.2	12.5	132	19	22	38	58	M16x1.5	145	84	10	41.3	M8x8
50-200/11	11	15	160	19	22	42	63	M16x1.5	178	114	12	45.3	M8x8
50-200/15	15	20	160	22	22	42	63	M18x1.5	209	114	12	45.3	M8x8
65-125/4.0	4	5.5	112	19	22	28	43	M16x1.5	122	63	8	31.3	M8x8
65-125/5.5	5.5	7.5	132	19	22	38	58	M16x1.5	145	84	10	41.3	M8x8
65-125/7.5	7.5	10	132	19	22	38	58	M16x1.5	145	84	10	41.3	M8x8
65-160/7.5	7.5	10	132	19	22	38	58	M16x1.5	145	84	10	41.3	M8x8
65-160/9.2	9.2	12.5	132	19	22	38	58	M16x1.5	145	84	10	41.3	M8x8
65-160/11	11	15	160	19	22	42	63	M16x1.5	178	114	12	45.3	M8x8
65-160/15	15	20	160	24	30	42	63	M20x1.5	184	114	12	45.3	M8x8
65-200/15	15	20	160	24	30	42	63	M20x1.5	184	114	12	45.3	M8x8
65-200/18.5	18.5	25	160	24	30	42	63	M20x1.5	184	114	12	45.3	M8x8
65-200/22	22	30	180	24	30	48	72	M20x1.5	184	114	14	51.8	M10x10

3DP FLEXIBLE COUPLING

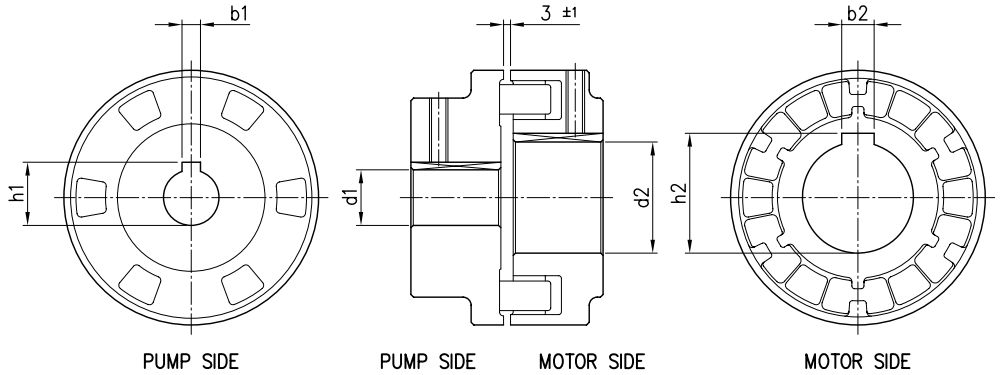

Pump type	Power		Motor	Dimensions [mm]					
	[KW]	[HP]	Size	d1	b1	h1	d2	b2	h2
32-125/1.1	1.1	1.5	80	24	8	27.3	19	6	21.8
32-160/1.5	1.5	2	90	24	8	27.3	24	8	27.3
32-160/2.2	2.2	3	90	24	8	27.3	24	8	27.3
32-200/3.0	3	4	100	24	8	27.3	28	8	31.3
32-200/4.0	4	5.5	112	24	8	27.3	28	8	31.3
32-200/7.5	7.5	10	132	24	8	27.3	38	10	41.3
40-125/1.5	1.5	2	90	24	8	27.3	24	8	27.3
40-125/2.2	2.2	3	90	24	8	27.3	24	8	27.3
40-160/3.0	3	4	100	24	8	27.3	28	8	31.3
40-160/4.0	4	5.5	112	24	8	27.3	28	8	31.3
40-200/5.5	5.5	7.5	132	24	8	27.3	38	10	41.3
40-200/7.5	7.5	10	132	24	8	27.3	38	10	41.3
40-200/11	11	15	160	24	8	27.3	42	12	45.3
50-125/2.2	2.2	3	90	24	8	27.3	24	8	27.3
50-125/3.0	3	4	100	24	8	27.3	28	8	31.3
50-125/4.0	4	5.5	112	24	8	27.3	28	8	31.3
50-160/5.5	5.5	7.5	132	24	8	27.3	38	10	41.3
50-160/7.5	7.5	10	132	24	8	27.3	38	10	41.3
50-200/9.2	9.2	12.5	132	24	8	27.3	38	10	41.3
50-200/11	11	15	160	24	8	27.3	42	12	45.3
50-200/15	15	20	160	24	8	27.3	42	12	45.3
65-125/4.0	4	5.5	112	24	8	27.3	28	8	31.3
65-125/5.5	5.5	7.5	132	24	8	27.3	38	10	41.3
65-160/7.5	7.5	10	132	24	8	27.3	38	10	41.3
65-160/9.2	9.2	12.5	132	24	8	27.3	38	10	41.3
65-160/11	11	15	160	24	8	27.3	42	12	45.3
65-160/15	15	20	160	24	8	27.3	42	12	45.3
65-200/15	15	20	160	24	8	27.3	42	12	45.3
65-200/18.5	18.5	25	160	24	8	27.3	42	12	45.3

FITTINGS

COUNTERFLANGES GALVANIZED STEEL

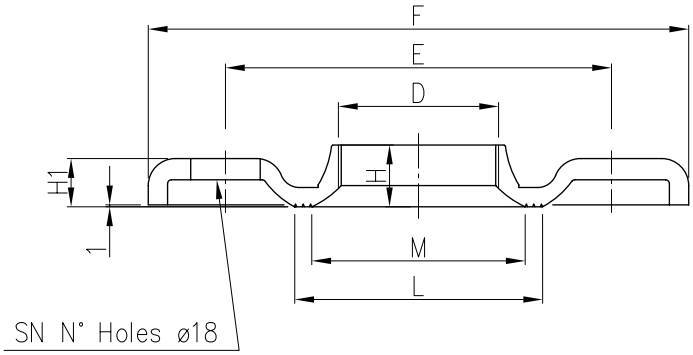

	Dimensions									Screws	
DN	D	PN	E	F	H	H1	L	M	SN	DIMENSION	MATERIAL
32	G 1 ¼		100	140	15	11.5	67	50	4	M16x55	Gv. Steel 8.8 Strenght class ISO 898-1
40	G 1 ½		110	150	17.5	11.5	72	58	4		
50	G 2	10	125	165	19	15	89	70	4		
65	G 2 ½		145	185	23	14	104	88	4		
80	G 3		160	200	24	14.5	117.5	100	4		
80	G 3	16	160	200	24	16	120	98	8		

GASKETS

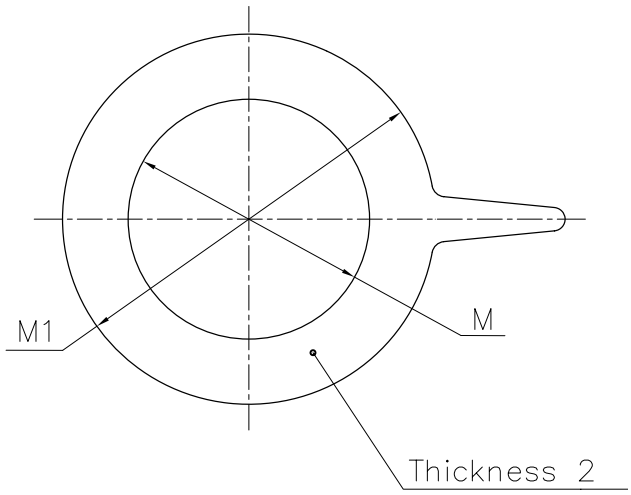

DN	M	M1
32	38	82
40	50	93
50	60	107
65	80	125
80	90	140

Material: EPDM for standard version
FPM for hot water version

DIMENSIONS and WEIGHT

50Hz

Rev.W

PUMP 3D

UP TO 11 kW

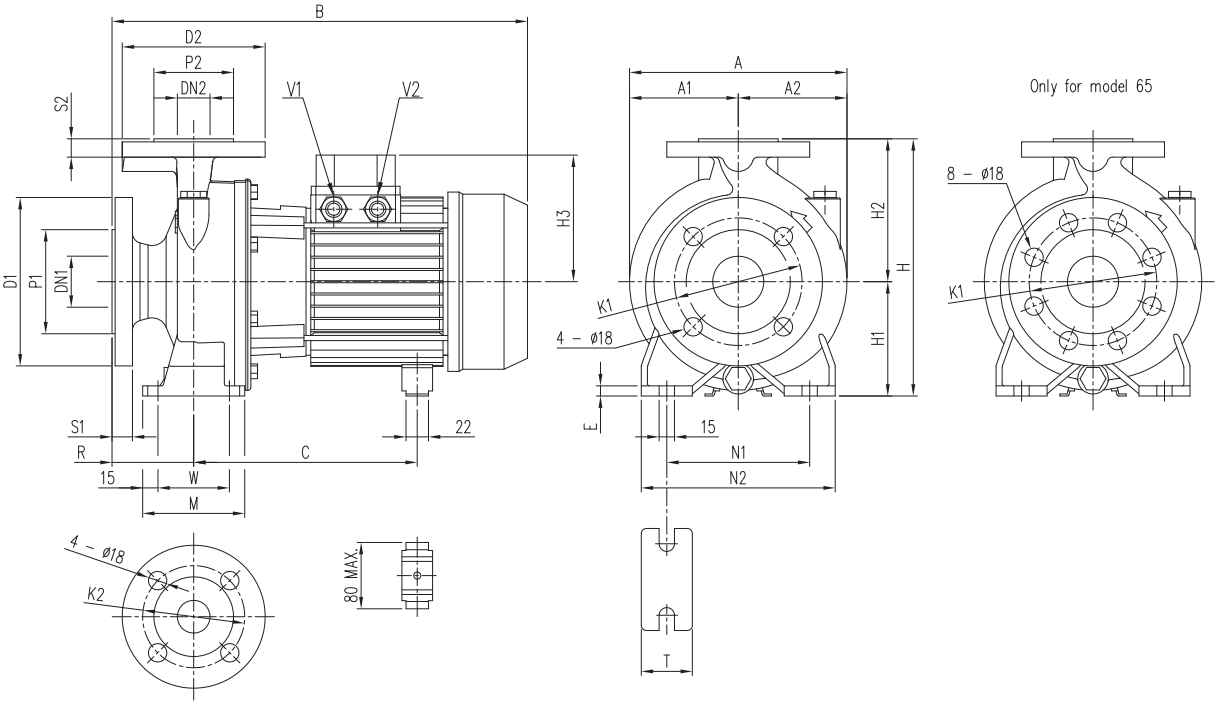

Model	Dimensions [mm]																																Weight [kgf]	
	Ø DN1	Ø P1	Ø K1	Ø D1	S1	Ø DN2	Ø P2	Ø K2	Ø D2	S2	H	H1	H2	H3 [1~]	H3 [3~]	R	W	M	N1	N2	T	E	A	A1	A2	B [1~]	B [3~]	C [1~]	C [3~]	V1 [3~]	V1 (*)	V2 [1~]	V2 [3~]	[1~]	[3~]
32-125/1.1 (M)	50	102	125	165	20	32	78	100	140	18	252	112	140	141	119	80	70	100	140	190	50	10	213	106,5	106,5	433	431	219÷230	232	-	-	M20x1.5	M16x1.5	31	29,5
32-160/1.5 (M)	50	102	125	165	20	32	78	100	140	18	292	132	160	141	119	80	70	100	190	240	50	10	254	127	127	433	431	219÷230	232	-	-	M20x1.5	M20x1.5	34	33,5
32-160/2.2 (M)	50	102	125	165	20	32	78	100	140	18	292	132	160	141	119	80	70	100	190	240	50	10	254	127	127	445	431	219÷230	232	-	-	M20x1.5	M20x1.5	37	36
32-200/3.0	50	102	125	165	20	32	78	100	140	18	340	160	180	-	124	80	70	100	190	240	50	10	296	148	148	-	471	-	244÷255	-	-	-	M20x1.5	-	47,5
32-200/4.0	50	102	125	165	20	32	78	100	140	18	340	160	180	-	141	80	70	100	190	240	50	10	296	148	148	-	494	-	253	-	-	-	M20x1.5	-	50
32-200/7.5	50	102	125	165	20	32	78	100	140	18	340	160	180	-	150	80	70	100	190	240	50	10	296	148	148	-	539	-	275	-	PG 13.5	-	PG 16	-	65,1
40-125/1.5 (M)	65	122	145	185	20	40	88	110	150	18	252	112	140	141	119	80	70	100	160	210	50	10	220	108	112	433	431	219÷230	232	-	-	M20x1.5	M20x1.5	32	30
40-125/2.2 (M)	65	122	145	185	20	40	88	110	150	18	252	112	140	141	119	80	70	100	160	210	50	10	220	108	112	445	431	219÷230	232	-	-	M20x1.5	M20x1.5	37	32
40-160/3.0	65	122	145	185	20	40	88	110	150	18	292	132	160	-	124	80	70	100	190	240	50	12	254	127	127	-	471	-	244÷255	-	-	-	M20x1.5	-	39
40-160/4.0	65	122	145	185	20	40	88	110	150	18	292	132	160	-	141	80	70	100	190	240	50	12	254	127	127	-	494	-	253	-	-	-	M20x1.5	-	48
40-200/5.5	65	122	145	185	20	40	88	110	150	18	340	160	180	-	150	100	70	100	212	265	50	12	296	148	148	-	539	-	275	PG 13.5	M20x1.5	-	M25x1.5	-	60
40-200/7.5	65	122	145	185	20	40	88	110	150	18	340	160	180	-	150	100	70	100	212	265	50	12	296	148	148	-	559	-	275	-	PG 13.5	-	PG 16	-	66,1
40-200/11	65	122	145	185	20	40	88	110	150	18	340	160	180	-	178	100	70	100	212	265	50	12	296	148	148	-	595	-	329	-	PG 13.5	-	PG 21	-	82,4
50-125/2.2 (M)	65	122	145	185	20	50	102	125	165	20	292	132	160	141	119	100	70	100	190	240	50	10	254	127	127	466	451	219÷230	232	-	-	M20x1.5	M20x1.5	39.5	37
50-125/3.0	65	122	145	185	20	50	102	125	165	20	292	132	160	-	124	100	70	100	190	240	50	10	254	127	127	-	491	-	244÷255	-	-	-	M20x1.5	-	39,5
50-125/4.0	65	122	145	185	20	50	102	125	165	20	292	132	160	-	141	100	70	100	190	240	50	10	254	127	127	-	514	-	253	-	-	-	M20x1.5	-	48
50-160/5.5	65	122	145	185	20	50	102	125	165	20	340	160	180	-	150	100	70	100	212	265	50	10	296	148	148	-	539	-	275	PG 13.5	M20x1.5	-	M25x1.5	-	60
50-160/7.5	65	122	145	185	20	50	102	125	165	20	340	160	180	-	150	100	70	100	212	265	50	10	296	148	148	-	559	-	275	-	PG 13.5	-	PG 16	-	67.1
50-200/9.2	65	122	145	185	20	50	102	125	165	20	360	160	200	-	178	100	70	100	212	265	50	10	296	148	148	-	595	-	329	-	PG 13.5	-	PG 21	-	77
50-200/11	65	122	145	185	20	50	102	125	165	20	360	160	200	-	178	100	70	100	212	265	50	10	296	148	148	-	595	-	329	-	PG 13.5	-	PG 21	-	82,4
65-125/4.0	80	138	160	200	22	65	122	145	185	20	340	160	180	-	141	100	95	125	212	280	65	12	263	127	136	-	514	-	253	-	-	-	M20x1.5	-	53
65-125/5,5	80	138	160	200	22	65	122	145	185	20	340	160	180	-	150	100	95	125	212	280	65	12	263	127	136	-	539	-	275	PG 13.5	M20x1.5	-	M25x1.5	-	65
65-125/7,5	80	138	160	200	22	65	122	145	185	20	340	160	180	-	150	100	95	125	212	280	65	12	263	127	136	-	559	-	275	-	PG 13.5	-	PG 16	-	72,6
65-160/7,5	80	138	160	200	22	65	122	145	185	20	360	160	200	-	150	100	95	125	212	280	65	12	296	148	148	-	559	-	275	-	PG 13.5	-	PG 16	-	73.1
65-160/9,2	80	138	160	200	22	65	122	145	185	20	360	160	200	-	178	100	95	125	212	280	65	12	296	148	148	-	595	-	329	-	PG 13.5	-	PG 21	-	85
65-160/11	80	138	160	200	22	65	122	145	185	20	360	160	200	-	178	100	95	125	212	280	65	12	296	148	148	-	595	-	329	-	PG 13.5	-	PG 21	-	87,4

DIMENSIONS and WEIGHT

50Hz

Rev.W

PUMP 3D

15 kW AND ABOVE

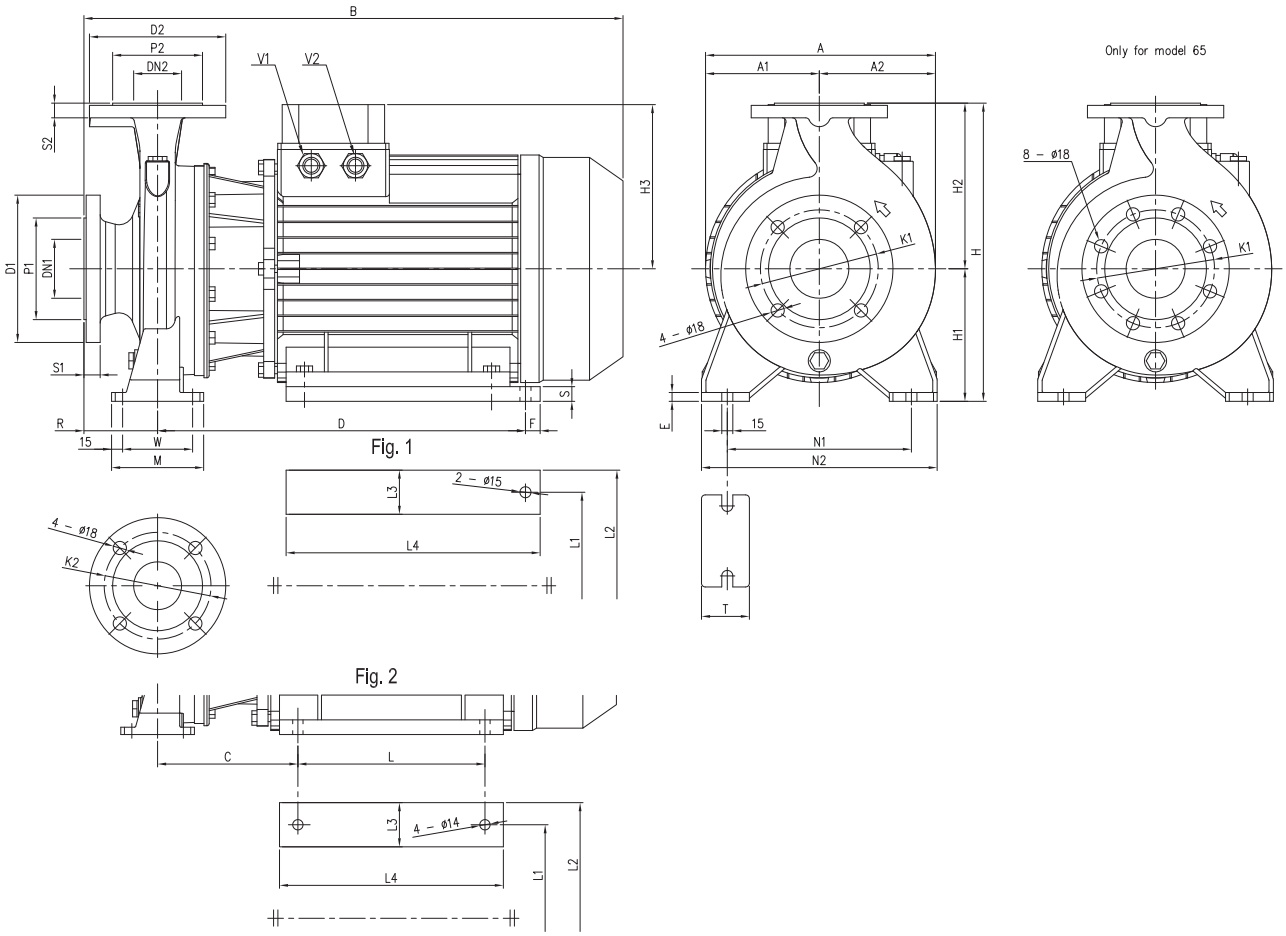

Model	Dimensions [mm]																																			Weight [kgf]
	Ø DN1	Ø P1	Ø K1	Ø D1	S1	Ø DN2	Ø P2	Ø K2	Ø D2	S2	H	H1	H2	H3	Fig.	R	W	M	N1	N2	T	E	A	A1	A2	B	C	L	L1	L2	L3	L4	D	F	S	V1	V2	
50-200/15	65	122	145	185	20	50	102	125	165	20	360	160	200	223	2	100	70	100	212	265	50	10	296	154,5	141,5	723	190,5	254	254	318	64	304	-	-	-	PG 21	PG 21	124,1
65-160/15	80	138	160	200	22	65	122	145	185	20	360	160	200	223	2	100	95	125	212	280	65	12	296	154,5	141,5	732	199,5	254	254	318	64	304	-	-	-	PG 21	PG 21	129,1
65-200/15	80	138	160	200	22	65	122	145	185	20	405	180	225	223	1	100	95	125	250	320	65	12	312	154,5	157,5	732	-	-	254	314	60	345	499,5	20	20	PG 21	PG 21	129,1
65-200/18.5	80	138	160	200	22	65	122	145	185	20	405	180	225	223	1	100	95	125	250	320	65	12	312	154,5	157,5	732	-	-	254	314	60	345	499,5	20	20	PG 21	PG 21	146,3
65-200/22	80	138	160	200	22	65	122	145	185	20	405	180	225	223	1	100	95	125	250	320	65	12	312	154,5	157,5	732	-	-	254	314	60	345	499,5	20	20	PG 21	PG 21	158

DIMENSIONS and WEIGHT

50Hz

Rev.W

PUMP 3DS 32, 40, 50

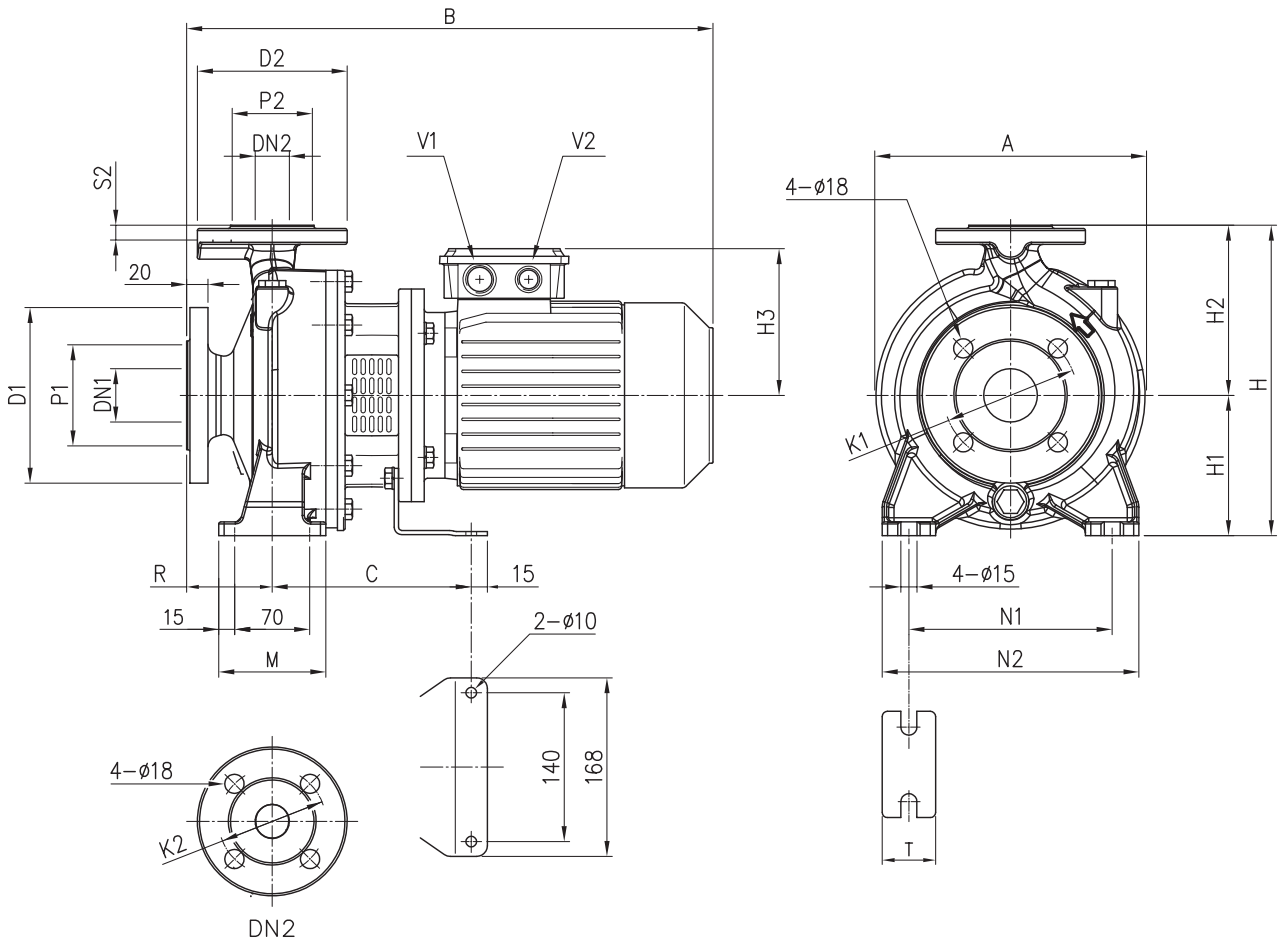

Model	Dimensions [mm]																							Weight
	Ø DN1	Ø P1	Ø K1	Ø D1	Ø DN2	Ø P2	Ø K2	Ø D2	S2	H	H1	H2	H3	R	M	N1	N2	T	A	B	C	V1	V2	Kgf
32-125/1.1	50	102	125	165	32	78	100	140	18	252	112	140	139	80	100	140	190	50	213	430	174	M25x1.5	M20x1.5	32.1
32-160/1.5	50	102	125	165	32	75	100	140	18	292	132	160	148	80	100	190	240	50	254	477	186	M25x1.5	M20x1.5	36.3
32-160/2.2	50	102	125	165	32	75	100	140	18	292	132	160	148	80	100	190	240	50	254	477	186	M25x1.5	M20x1.5	40.4
40-125/1.5	65	115	145	185	40	80	110	150	14	252	112	140	148	80	114	160	210	50	213	477	186	M25x1.5	M20x1.5	31.9
40-125/2.2	65	115	145	185	40	80	110	150	14	252	112	140	148	80	114	160	210	50	213	477	186	M25x1.5	M20x1.5	35.5
50-125/2.2	65	115	145	185	50	95	125	165	16	292	132	160	148	100	114	190	240	50	254	497	186	M25x1.5	M20x1.5	37.9

DIMENSIONS and WEIGHT

50Hz

Rev.W

PUMP 3DS 32, 65

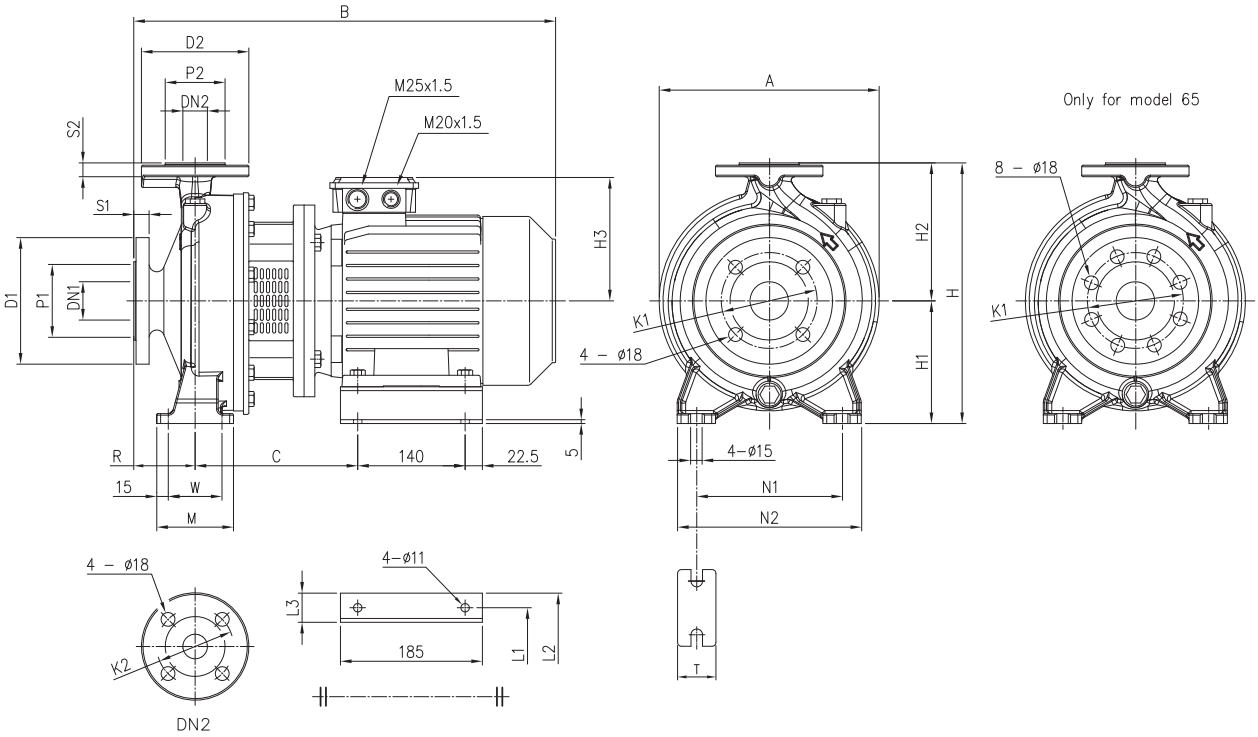

Model	Dimensions [mm]																									Weight
	Ø DN1	Ø P1	Ø K1	Ø D1	S1	Ø DN2	Ø P2	Ø K2	Ø D2	S2	H	H1	H2	H3	R	W	M	N1	N2	T	A	B	C	L1	L2	L3	Kgf
32-200/3.0	50	102	125	165	20	32	78	100	140	18	340	160	180	155	80	70	100	190	240	50	296	528	205	160	202	42	59,3
32-200/4.0	50	102	125	165	20	32	78	100	140	18	340	160	180	171	80	70	100	190	240	50	296	550	212	190	228	38	60,8
65-125/4.0	80	138	160	200	22	65	122	145	185	20	340	160	180	171	100	95	125	212	280	65	263	570	212	190	228	38	65,4

DIMENSIONS and WEIGHT

50Hz

Rev.W

PUMP 3DS 40, 50, 65

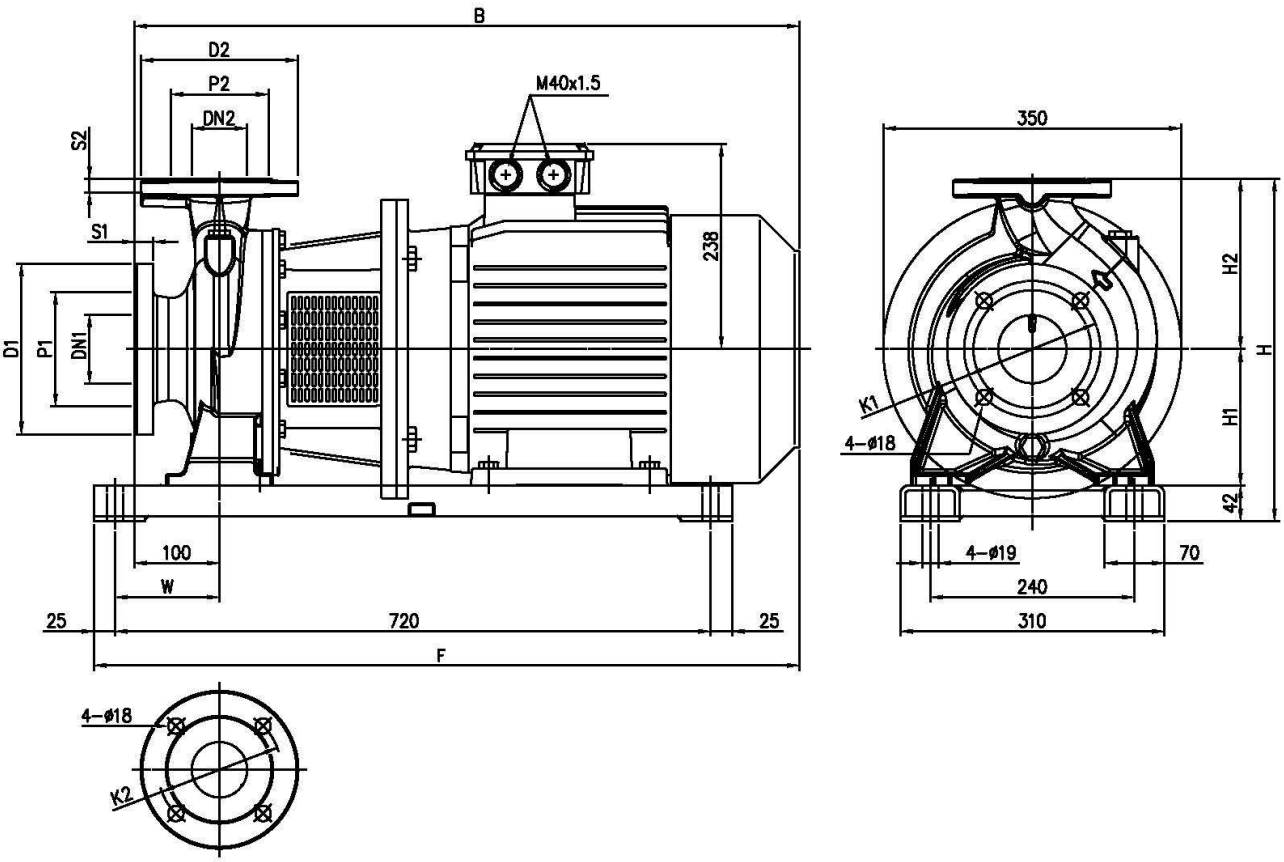

Model	Dimensions [mm]																Weight [kgf]
	Ø DN1	Ø P1	Ø K1	Ø D1	S1	Ø DN2	Ø P2	Ø K2	Ø D2	S2	H	H1	H2	W	B	F	
40-200/11	65	122	145	185	20	40	88	110	150	18	382	160	180	110	796	833	130,8
50-200/11	65	122	145	185	20	50	102	125	165	20	402	160	200	110	796	833	130,8
50-200/15	65	122	145	185	20	50	102	125	165	20	402	160	200	110	796	833	166,9
65-160/11	80	138	160	200	22	65	115	145	185	20	402	160	200	123	796	844	106,8
65-160/15	80	138	160	200	22	65	115	145	185	20	402	160	200	123	806	856	142,9

DIMENSIONS and WEIGHT

50Hz

Rev.W

PUMP 3DS 32, 40, 50, 65

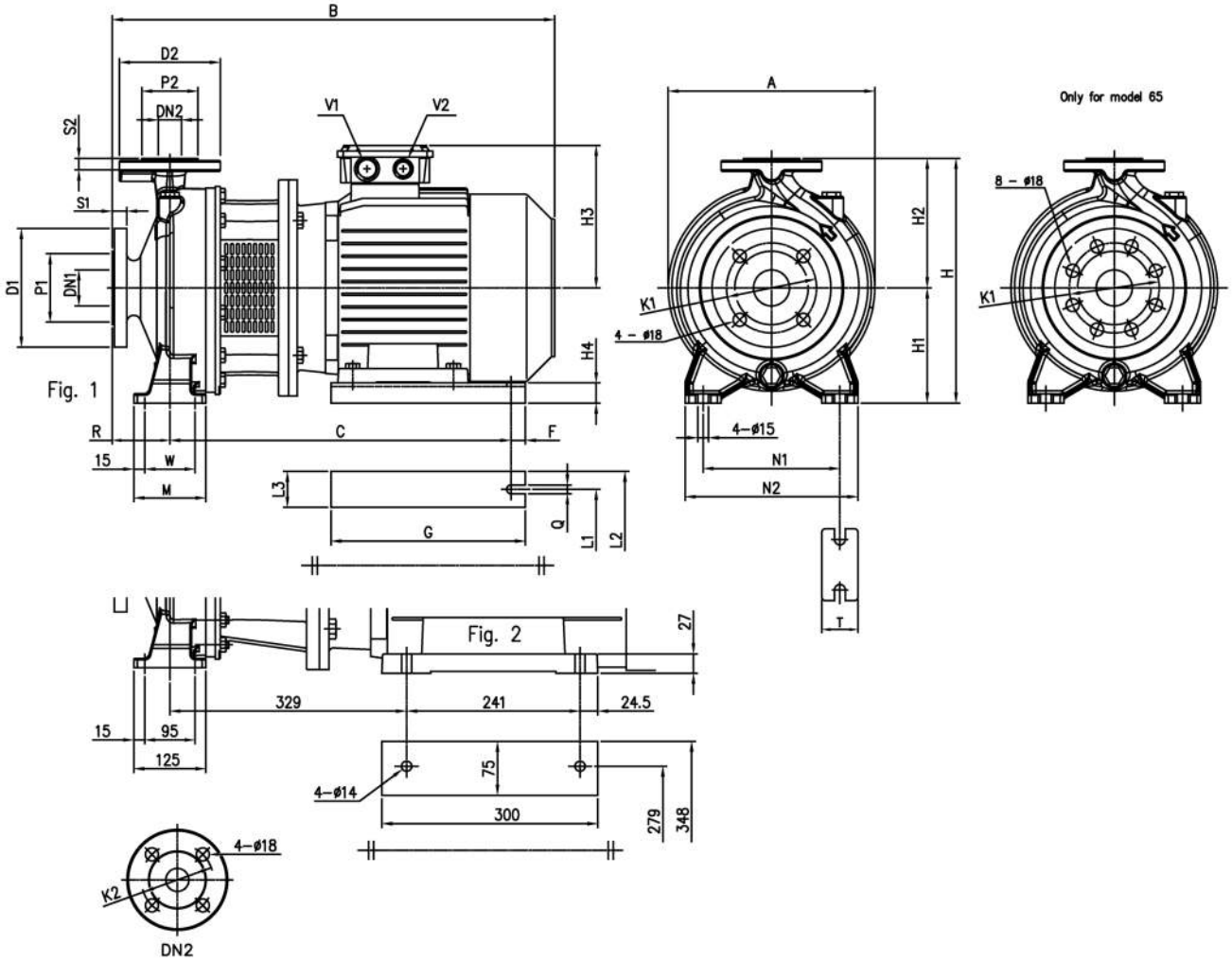

Model	Ø DN1	Ø P1	Ø K1	Ø D1	S1	Ø DN2	Ø P2	Ø K2	Ø D2	S2	Fig.	H	H1	H2	H3	H4	R	W	M	N1	N2	T	A	B	C	F	G	Q	L1	L2	L3	V1	V2	Weight Kgf
	Dimensions [mm]																																	
32-200/7.5	50	102	125	165	20	32	78	100	140	18	1	340	160	180	184	28	80	70	100	190	240	50	300	630	479	15	270	12	216	266	50	M32X1.5	M32X1.5	92
40-160/3.0	65	122	145	185	20	40	88	110	150	18	1	292	132	160	155	32	80	70	100	190	240	50	254	528	388	15	220	12	160	200	40	M25X1.5	M20X1.5	65,6
40-160/4.0	65	122	145	185	20	40	88	110	150	18	1	292	132	160	171	20	80	70	100	190	240	50	254	550	395	15	220	12	190	240	50	M25X1.5	M20X1.5	51,8
40-200/5.5	65	122	145	185	20	40	88	110	150	18	1	340	160	180	198	28	100	70	100	212	265	50	296	630	479	15	270	12	216	266	50	M32X1.5	M32X1.5	79,7
40-200/7.5	65	122	145	185	20	40	88	110	150	18	1	340	160	180	198	28	100	70	100	212	265	50	296	650	479	15	270	12	216	266	50	M32X1.5	M32X1.5	88,8
50-125/3.0	65	122	145	185	20	50	102	125	165	20	1	292	132	160	155	32	100	70	100	190	240	50	254	548	388	15	220	12	160	200	40	M25X1.5	M20X1.5	44,1
50-125/4.0	65	122	145	185	20	50	102	125	165	20	1	292	132	160	171	20	100	70	100	190	240	50	254	570	395	15	220	12	190	240	50	M25X1.5	M20X1.5	52,7
50-160/5.5	65	122	145	185	20	50	102	125	165	20	1	340	160	180	198	28	100	70	100	212	265	50	296	630	479	15	270	12	216	266	50	M32X1.5	M32X1.5	77,3
50-160/7.5	65	122	145	185	20	50	102	125	165	20	1	340	160	180	198	28	100	70	100	212	265	50	296	650	479	15	270	12	216	266	50	M32X1.5	M32X1.5	99,5
50-200/9.2	65	122	145	185	20	50	102	125	165	20	1	360	160	200	198	28	100	70	100	212	265	50	296	690	479	15	270	12	216	266	50	M32X1.5	M32X1.5	104
65-125/5.5	80	138	160	200	22	65	122	145	185	20	1	340	160	180	198	28	100	95	125	212	280	65	263	630	479	15	270	12	216	266	50	M32X1.5	M32X1.5	76,3
65-125/7.5	80	138	160	200	22	65	122	145	185	20	1	340	160	180	198	28	100	95	125	212	280	65	263	650	479	15	270	12	216	266	50	M32X1.5	M32X1.5	99,9
65-160/7.5	80	138	160	200	22	65	122	145	185	20	1	360	160	200	198	28	100	95	125	212	280	65	296	650	479	15	270	12	216	266	50	M32X1.5	M32X1.5	99,2
65-160/9.2	80	138	160	200	22	65	122	145	185	20	1	360	160	200	198	28	100	95	125	212	280	65	296	690	479	15	270	12	216	266	50	M32X1.5	M32X1.5	108
65-200/15	80	138	160	200	22	65	122	145	185	20	1	405	180	225	238	20	100	95	125	250	320	65	312	806	621	20	350	14	254	314	60	M40X1.5	M40X1.5	156,9
65-200/18.5	80	138	160	200	22	65	122	145	185	20	1	405	180	225	238	20	100	95	125	250	320	65	312	850	621	20	350	14	254	314	60	M40X1.5	M40X1.5	158,5
65-200/22	80	138	160	200	22	65	122	145	185	20	2	405	180	225	268	-	100	-	-	250	320	65	312	860	-	-	-	-	-	-	-	M40X1.5	M40X1.5	216

DIMENSIONS and WEIGHT

50Hz

Rev.W

PUMP 3DP 32, 40, 50, 65

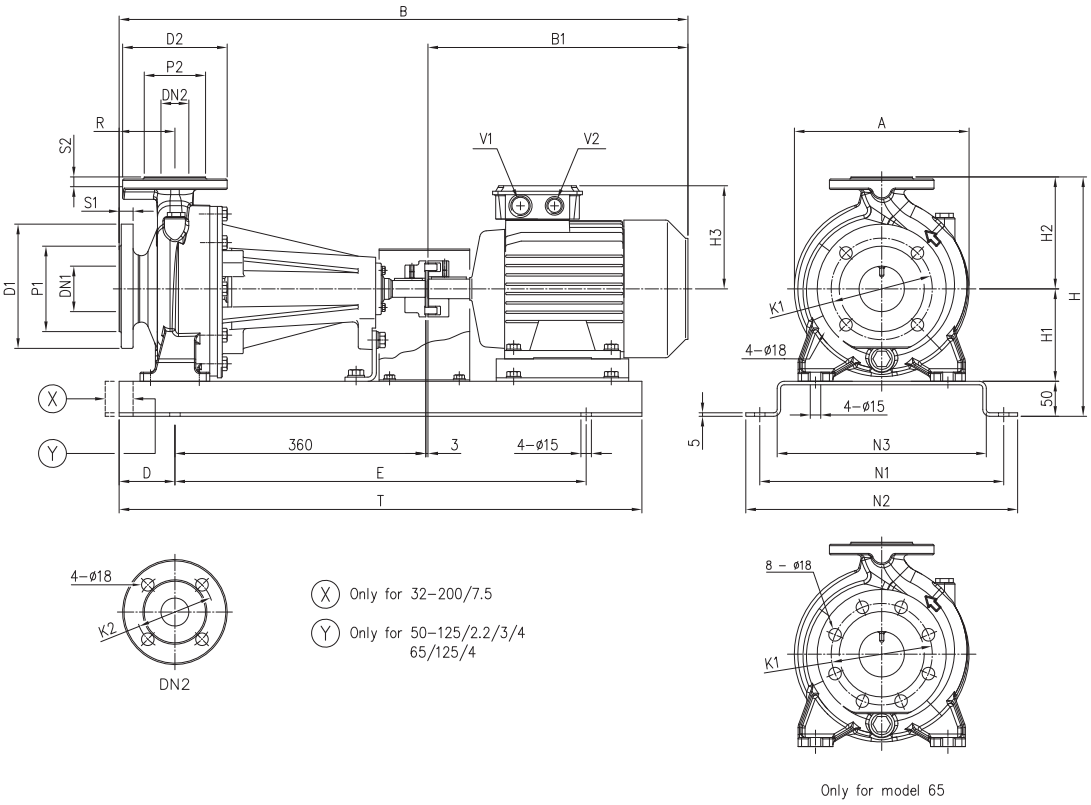

Model	Dimensions [mm]																									Weight
	Ø DN1	Ø P1	Ø K1	Ø D1	S1	Ø DN2	Ø P2	Ø K2	Ø D2	S2	H	H1	H2	H3	R	A	B	B1	D	E	N1	N2	N3	T	V1	V2	Kgf
32-125/1.1	50	102	125	165	20	32	78	100	140	18	302	112	140	139	80	213	715	272	80	550	300	340	250	710	M25x1.5	M20x1.5	62.1
32-160/1.5	50	102	125	165	20	32	78	100	140	18	342	132	160	148	80	254	760	317	80	590	350	390	300	750	M25x1.5	M20x1.5	58,5
32-160/2.2	50	102	125	165	20	32	78	100	140	18	342	132	160	148	80	254	760	317	80	590	350	390	300	750	M25x1.5	M20x1.5	61,5
32-200/3.0	50	102	125	165	20	32	78	100	140	18	390	160	180	155	80	296	809	366	80	590	350	390	300	750	M25x1.5	M20x1.5	83,9
32-200/4.0	50	102	125	165	20	32	78	100	140	18	390	160	180	171	80	296	831	388	80	590	350	390	300	750	M25x1.5	M20x1.5	86,9
32-200/7.5	50	102	125	165	20	32	78	100	140	18	390	160	180	198	80	296	908	442	100	650	350	390	300	850	M32x1.5	M32x1.5	117,2
40-125/1.5	65	122	145	185	20	40	88	110	150	18	302	112	140	148	80	220	760	317	80	550	300	340	250	710	M25x1.5	M20x1.5	76,2
40-125/2.2	65	122	145	185	20	40	88	110	150	18	302	112	140	148	80	220	760	317	80	550	300	340	250	710	M25x1.5	M20x1.5	56,9
40-160/3.0	65	122	145	185	20	40	88	110	150	18	342	132	160	155	80	254	809	366	80	590	350	390	300	750	M25x1.5	M20x1.5	93,4
40-160/4.0	65	122	145	185	20	40	88	110	150	18	342	132	160	171	80	254	831	388	80	590	350	390	300	750	M25x1.5	M20x1.5	74,8
40-200/5.5	65	122	145	185	20	40	88	110	150	18	390	160	180	198	100	296	908	442	100	650	350	390	300	850	M32x1.5	M20x1.5	105
40-200/7.5	65	122	145	185	20	40	88	110	150	18	390	160	180	198	100	296	928	442	100	650	350	390	300	850	M32x1.5	M32x1.5	113,7
40-200/11	65	122	145	185	20	40	88	110	150	18	390	160	180	238	100	296	1071	610	100	800	380	420	330	1000	M40x1.5	M40x1.5	140,6
50-125/2.2	65	122	145	185	20	50	102	125	165	20	342	132	160	148	100	254	780	317	80	550	350	390	300	710	M25x1.5	M20x1.5	80
50-125/3.0	65	122	145	185	20	50	102	125	165	20	342	132	160	155	100	254	829	366	80	590	350	390	300	750	M25x1.5	M20x1.5	91,1
50-125/4.0	65	122	145	185	20	50	102	125	165	20	342	132	160	171	100	254	851	388	80	590	350	390	300	750	M25x1.5	M20x1.5	91,7
50-160/5.5	65	122	145	185	20	50	102	125	165	20	390	160	180	198	100	296	908	442	100	650	350	390	300	850	M32x1.5	M32x1.5	111,5
50-160/7.5	65	122	145	185	20	50	102	125	165	20	390	160	180	198	100	296	928	442	100	650	350	390	300	850	M32x1.5	M32x1.5	115,4
50-200/9.2	65	122	145	185	20	50	102	125	165	20	410	160	200	198	100	296	968	482	100	650	350	390	300	850	M32x1.5	M32x1.5	124,1
50-200/11	65	122	145	185	20	50	102	125	165	20	410	160	200	238	100	296	1071	610	100	800	380	420	330	1000	M40x1.5	M32x1.5	144,4
50-200/15	65	122	145	185	20	50	102	125	165	20	410	160	200	238	100	296	1071	610	100	800	380	420	330	1000	M40x1.5	M40x1.5	154,4
65-125/4.0	80	138	160	200	22	65	122	145	185	20	390	160	180	171	100	263	851	388	80	590	350	390	300	750	M25x1.5	M20x1.5	70,9
65-125/5.5	80	138	160	200	22	65	122	145	185	20	390	160	180	198	100	263	908	442	100	650	350	390	300	850	M32x1.5	M32x1.5	115,3
65-125/7.5	80	138	160	200	22	65	122	145	185	20	390	160	180	198	100	263	928	442	100	650	350	390	300	850	M32x1.5	M32x1.5	129,9
65-160/7.5	80	138	160	200	22	65	122	145	185	20	410	160	200	198	100	296	928	442	100	650	350	390	300	850	M32x1.5	M32x1.5	133,2
65-160/9.2	80	138	160	200	22	65	122	145	185	20	410	160	200	198	100	296	968	482	100	650	350	390	300	850	M32x1.5	M32x1.5	138
65-160/11	80	138	160	200	22	65	122	145	185	20	410	160	200	238	100	296	1071	610	100	800	380	420	330	1000	M40x1.5	M40x1.5	144,8
65-160/15	80	138	160	200	22	65	122	145	185	20	455	160	200	238	100	296	1071	610	100	800	380	420	330	1000	M40x1.5	M40x1.5	151
65-200/15	80	138	160	200	22	65	122	145	185	20	455	180	225	238	100	312	1071	610	100	800	380	420	330	1000	M40x1.5	M40x1.5	156
65-200/18.5	80	138	160	200	22	65	122	145	185	20	455	180	225	238	100	312	1115	654	100	800	380	420	330	1000	M40x1.5	M40x1.5	156,2

PACKING 3D

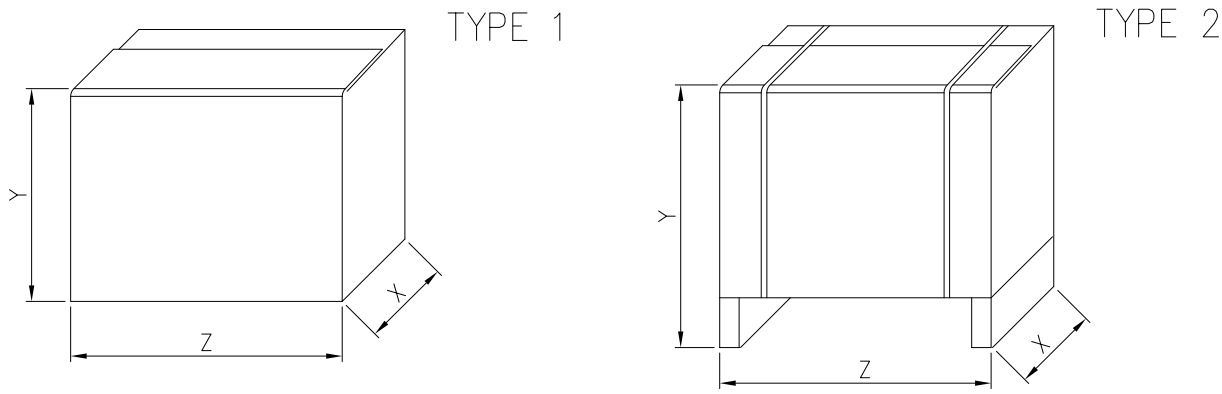

Pump type	Packing [mm] X [1~]	X [3~]	Y [1~]	Y [3~]	Z [1~]	Z [3~]	Weight [kgf] [1~]	[3~]	Pack type
32-125/1.1 (M)	280	280	350	360	490	470	33	31,5	1
32-160/1.5 (M)							35,5	35,5	
32-160/2.2 (M)			360		535	535	42	45	
32-200/3.0	-	330	-	400	-	560	-	52,4	2
32-200/4.0								53,8	
32-200/7.5				410		680		69,4	
40-125/1.5 (M)	280	280	350	360	490	470	35	39	1
40-125/2.2 (M)			360		535	535	38,5	34	
40-160/3.0	-	330	-	400	-	560	-	39,8	2
40-160/4.0								52,6	
40-200/5.5		370		455		580		64,4	
40-200/7.5		330		410		680		71,5	
40-200/11								93,4	
50-125/2.2 (M)	280	280	360	360	535	535	41	39	1
50-125/3.0	-		-		-		-	40	2
50-125/4.0		330		400		560		52,6	
50-160/5.5		370		455		580		64,2	
50-160/7.5		330		410		680		71,7	
50-200/9.2								81	
50-200/11								87,4	
50-200/15		370		440		860		133	
65-125/4.0		330		400		560		58	
65-125/5.5		370		455		580		70,8	
65-125/7.5		330		410		680		81,8	
65-160/7.5								78	
65-160/9.2								93	
65-160/11								89,4	
65-160/15		370		440		860		138,6	
65-200/15								138	
65-200/18.5								155,8	
65-200/22								170,6	

PACKING 3DS

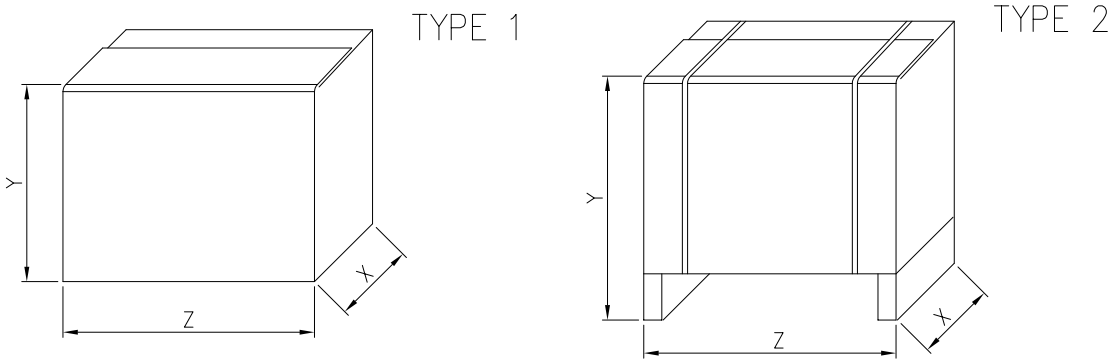

Pump type	Packing [mm]			Weight	Pack Type
	X	Y	Z	Kgf	
32-125/1.1	450	250	300	33,8	1
32-160/1.5	350	488	580	41,2	2
32-160/2.2	350	488	580	43,9	
32-200/3.0	350	498	700	63,4	
32-200/4.0	350	498	700	63,7	
32-200/7.5	350	498	700	97	
40-125/1.5	350	488	580	36	
40-125/2.2	350	488	580	39,7	
40-160/3.0	350	498	700	68,5	
40-160/4.0	350	498	700	56,2	
40-200/5.5	350	498	700	83,9	
40-200/7.5	350	498	700	101	
40-200/11	390	598	970	159,3	
50-125/2.2	350	498	700	42,9	
50-125/3.0	350	498	700	45,1	
50-125/4.0	350	498	700	57,8	
50-160/5.5	350	498	700	81,3	
50-160/7.5	350	498	700	111,8	
50-200/9.2	390	598	880	108	
50-200/11	390	598	880	138,8	
50-200/15	390	598	880	191,9	
65-125/4.0	350	498	700	72,6	
65-125/5.5	350	498	700	81,7	
65-125/7.5	350	498	700	105,6	
65-160/7.5	350	498	700	104,8	
65-160/9.2	390	598	880	109	
65-160/11	390	598	970	108,8	
65-160/15	390	598	970	150,9	
65-200/15	390	598	880	162,9	
65-200/18.5	390	598	970	165,5	
65-200/22	500	727	1100	219	

PACKING 3DP

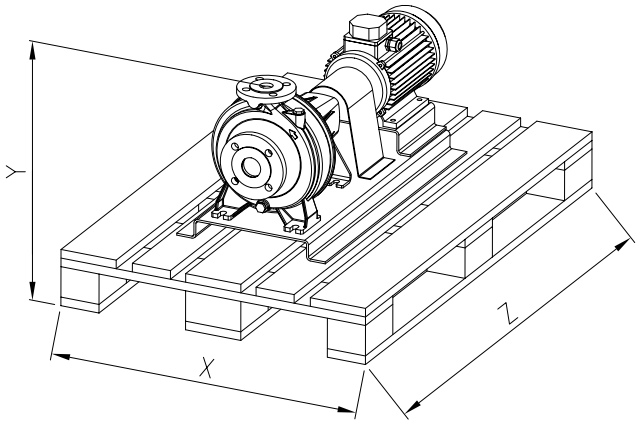

Pump type	Packing [mm]			Wweight
	X	Y	Z	Kgf
32-125/1.1	800	394	1200	65,6
32-160/1.5		434		72,0
32-160/2.2				75,0
32-200/3.0		482		97,5
32-200/4.0				100,5
32-200/7.5				130,7
40-125/1.5		394		89,7
40-125/2.2				70,5
40-160/3.0		434		107,0
40-160/4.0				88,3
40-200/5.5		482		118,5
40-200/7.5				127,2
40-200/11				154,1
50-125/2.2		434		93,5
50-125/3.0				104,5
50-125/4.0				105,2
50-160/5.5		482		125,0
50-160/7.5				129,0
50-200/9.2		502		137,6
50-200/11				157,9
50-200/15				167,9
65-125/4.0		482		84,4
65-125/5.5				128,8
65-125/7.5				143,5
65-160/7.5		502		146,7
65-160/9.2				151,5
65-160/11				158,3
65-160/15		547		164,5
65-200/15				169,5
65-200/18.5				169,7
65-200/22				224,5

MOTOR DATA 3D

Pump type	Power		Efficiency	Capacitor		Efficiency (% load)				Input	Full load current	Locked rotor current
Single Phase	[kW]	[HP]	[IE2 / IE3]	[mF]	[V]	η % 50%	75%	100%	cos-φ	[kW]	[A] 230 V	[A] 230 V
3D 32-125/1.1 M	1,1	1,5	IE2	50	450	66,5	75,5	80,9	0,96	1,47	6,7	46,4
3D 32-160/1.5 M	1,5	2,0	IE2	50	450	72,4	79,2	81,4	0,96	1,94	8,7	54
3D 32-160/2.2 M	2,2	3,0	IE2	55	450	76,5	81,5	83,8	0,95	2,72	12,3	73
3D 40-125/1,5 M	1,5	2,0	IE2	50	450	72,4	79,2	81,4	0,96	1,94	8,7	54
3D 40-125/2.2 M	2,2	3,0	IE2	55	450	76,5	81,5	83,8	0,95	2,72	12,3	73
3D 50-125/2.2 M	2,2	3,0	IE2	55	450	76,5	81,5	83,8	0,95	2,72	12,3	73

Pump type	Power		Efficiency (% load)			Input	Full load current			Locked rotor current		
Three Phase	[kW]	[HP]	η % 50%	75%	100%	[kW]	[A] 230 V	400 V	690 V	[A] 230 V	400 V	690 V
3D 32-125/1.1	1,1	1,5	83,5	84,3	84,6	1,77	5,8	3,3	-	47,4	27,4	-
3D 32-160/1.5	1,5	2,0	83,5	84,3	84,6	1,77	5,8	3,3	-	47,4	27,4	-
3D 32-160/2.2	2,2	3,0	86,2	87,0	86,0	2,55	8,2	4,7	-	66,6	38,4	-
3D 32-200/3.0	3,0	4,0	85,9	87,5	87,1	3,44	11,1	6,4	-	90,0	52,0	-
3D 32-200/4.0	4,0	5,5	85,8	88,3	88,4	4,52	15,1	8,7	-	131,8	76,1	-
3D 32-200/7.5	7,5	10,0	89,0	90,7	90,8	8,26	-	13,6	7,9	-	144,0	83,0
3D 40-125/1.5	1,5	2,0	83,5	84,3	84,6	1,77	5,8	3,3	-	47,4	27,4	-
3D 40-125/2.2	2,2	3,0	86,2	87,0	86,0	2,55	8,2	4,7	-	66,6	38,4	-
3D 40-160/3.0	3,0	4,0	85,9	87,5	87,1	3,44	11,1	6,4	-	90,0	52,0	-
3D 40-160/4.0	4,0	5,5	85,8	88,3	88,4	4,52	15,1	8,7	-	131,8	76,1	-
3D 40-200/5.5	5,5	7,5	89,2	90,6	90,4	6,09	-	10,6	6,1	-	115,3	67,0
3D 40-200/7.5	7,5	10,0	89,0	90,7	90,8	8,26	-	13,6	7,9	-	144,0	83,0
3D 40-200/11	11,0	15,0	90,4	91,2	91,8	11,98	-	21,3	12,3	-	184,0	107,0
3D 50-125/2.2	2,2	3,0	86,2	87,0	86,0	2,55	8,2	4,7	-	66,6	38,4	-
3D 50-125/3.0	3,0	4,0	85,0	86,7	86,3	3,48	10,6	6,1	-	100,0	57,7	-
3D 50-125/3.0	3,0	4,0	85,9	87,5	87,1	3,44	11,1	6,4	-	90,0	52,0	-
3D 50-125/4.0	4,0	5,5	85,8	88,3	88,4	4,52	15,1	8,7	-	131,8	76,1	-
3D 50-160/5.5	5,5	7,5	89,2	90,6	90,4	6,09	-	10,6	6,1	-	115,3	67,0
3D 50-160/7.5	7,5	10,0	89,0	90,7	90,8	8,26	-	13,6	7,9	-	144,0	83,0
3D 50-200/9.2	9,2	12,5	90,1	90,8	90,9	10,12	-	17,2	10,0	-	166,0	96,0
3D 50-200/11	11,0	15,0	90,4	91,2	91,8	11,98	-	21,3	12,3	-	184,0	107,0
3D 50-200/15	15,0	20,0	91,2	92,0	91,9	18,00	-	30,0	17,3	-	225,0	130,0
3D 65-125/4.0	4,0	5,5	84,3	87,2	87,8	4,56	15,1	8,7	-	151,0	87,0	-
3D 65-125/4	4,0	5,5	85,8	88,3	88,4	4,52	15,1	8,7	-	131,8	76,1	-
3D 65-125/5.5	5,5	7,5	82,9	86,0	87,4	6,29	-	10,4	6,0	-	116,0	67,0
3D 65-125/5.5	5,5	7,5	89,2	90,6	90,4	6,09	-	10,6	6,1	-	115,3	67,0
3D 65-125/7.5	7,5	10,0	89,0	90,7	90,8	8,26	-	13,6	7,9	-	144,0	83,0
3D 65-160/7.5	7,5	10,0	89,0	90,7	90,8	8,26	-	13,6	7,9	-	144,0	83,0
3D 65-160/9.2	9,2	12,5	90,1	90,8	90,9	10,12	-	17,2	10,0	-	166,0	96,0
3D 65-160/11	11,0	15,0	90,4	91,2	91,8	11,98	-	21,3	12,3	-	184,0	107,0
3D 65-160/15	15,0	20,0	91,2	92,0	91,9	16,32	-	27,7	17,3	-	225,0	130,0
3D 65-200/15	15,0	20,0	91,2	92,0	91,9	16,32	-	27,7	17,3	-	225,0	130,0
3D 65-200/18.5	18,5	25,0	91,6	93,0	92,6	19,98	-	35,0	20,3	-	328,0	190,0
3D 65-200/22	22,0	30,0	92,0	93,1	93,2	23,58	-	39,7	23,6	-	391,0	227,0

MOTOR DATA 3DS-3DP

Pump Type		Motor			Input [kW]	Efficiency (% load)				Full load current [A]			Locked rotor current [A]		
		Motor Size	Power [kW]	Power [HP]		η % 50%	η % 75%	η % 100%	cos-ϕ	230 V	400 V	690 V	230 V	400 V	690 V
3DS 32-125/1.1	3DP 32-125/1.1	80	1.1	1.5	1.26	78.7	81.7	82.7	0.8	4.2	2.4	-	38.7	22.3	-
3DS 32-160/1.5	3DP 32-160/1.5	90S	1.5	2	1.77	83.2	84.8	84.2	0.9	5.2	3.0	-	43.6	25.2	-
3DS 32-160/2.2	3DP 32-160/2.2	90L	2.2	3	2.61	85.0	86.2	86.5	0.8	8.0	4.6	-	73.3	42.3	-
3DS 32-200/3.0	3DP 32-200/3.0	100L	3	4	3.45	82.3	85.8	87.1	0.9	9.7	5.6	-	85.4	49.3	-
3DS 32-200/4.0	3DP 32-200/4.0	112M	4	5.5	4.54	85.4	87.2	88.1	0.8	13.9	8.0	-	151.5	87.2	-
3DS 32-200/7.5	3DP 32-200/7.5	132S	7.5	10	8.35	88.6	89.2	90.1	0.9	-	13.1	7.6	-	116.6	67.3
3DS 40-125/1.5	3DP 40-125/1.5	90S	1.5	2	1.77	83.2	84.8	84.2	0.9	5.2	3.0	-	43.6	25.2	-
3DS 40-125/2.2	3DP 40-125/2.2	90L	2.2	3	2.61	85.0	86.2	86.5	0.8	8.0	4.6	-	73.3	42.3	-
3DS 40-160/3.0	3DP 40-160/3.0	100L	3	4	3.45	82.3	85.8	87.1	0.9	9.7	5.6	-	85.4	49.3	-
3DS 40-160/4.0	3DP 40-160/4.0	112M	4	5.5	4.54	85.4	87.2	88.1	0.8	13.9	8.0	-	151.5	87.2	-
3DS 40-200/5.5	3DP 40-200/5.5	132S	5.5	7.5	6.24	88.0	88.5	89.2	0.9	-	10.0	5.8	-	89.0	51.4
3DS 40-200/7.5	3DP 40-200/7.5		7.5	10	8.35	88.6	89.2	90.1	0.9	-	13.1	7.6	-	116.6	67.3
3DS 40-200/11	3DP 40-200/11	160M	11	15	12.15	87.4	89.8	91.2	0.9	-	19.7	11.4	-	179.3	103.5
3DS 50-125/2.2	3DP 50-125/2.2	90L	2.2	3	2.61	85.0	86.2	86.5	0.8	8.0	4.6	-	73.3	42.3	-
3DS 50-125/3.0	3DP 50-125/3.0	100L	3	4	3.45	82.3	85.8	87.1	0.9	9.7	5.6	-	85.4	49.3	-
3DS 50-125/4.0	3DP 50-125/4.0	112M	4	5.5	4.54	85.4	87.2	88.1	0.8	13.9	8.0	-	151.5	87.2	-
3DS 50-160/5.5	3DP 50-160/5.5	132S	5.5	7.5	6.24	88.0	88.5	89.2	0.9	-	10.0	5.8	-	89.0	51.4
3DS 50-160/7.5	3DP 50-160/7.5		7.5	10	8.35	88.6	89.2	90.1	0.9	-	13.1	7.6	-	116.6	67.3
3DS 50-200/9.2	3DP 50-200/9.2	132M	9.2	12.5	10.17	88.6	89.8	90.7	0.9	-	16.5	9.5	-	166.7	96.2
3DS 50-200/11	3DP 50-200/11	160M	11	15	12.15	87.4	89.8	91.2	0.9	-	19.7	11.4	-	179.3	103.5
3DS 50-200/15	3DP 50-200/15		15	20	16.46	91.0	91.3	91.9	0.9	-	26.7	15.4	-	259.0	149.5
3DS 65-125/4	3DP 65-125/4	112M	4	5.5	4.54	85.4	87.2	88.1	0.8	13.9	8.0	-	151.5	87.2	-
3DS 65-125/5.5	3DP 65-125/5.5	132S	5.5	7.5	6.24	88.0	88.5	89.2	0.9	-	10.0	5.8	-	89.0	51.4
3DS 65-125/7.5	3DP 65-125/7.5		7.5	10	8.35	88.6	89.2	90.1	0.9	-	13.1	7.6	-	116.6	67.3
3DS 65-160/7.5	3DP 65-160/7.5		7.5	10	8.35	88.6	89.2	90.1	0.9	-	13.1	7.6	-	116.6	67.3
3DS 65-160/9.2	3DP 65-160/9.2	132M	9.2	12.5	10.17	88.6	89.8	90.7	0.9	-	16.5	9.5	-	166.7	96.2
3DS 65-160/11	3DP 65-160/11	160M	11	15	12.15	87.4	89.8	91.2	0.9	-	19.7	11.4	-	179.3	103.5
3DS 65-160/15	3DP 65-160/15		15	20	16.46	91.0	91.3	91.9	0.9	-	26.7	15.4	-	259.0	149.5
3DS 65-200/15	3DP 65-200/15		15	20	16.46	91.0	91.3	91.9	0.9	-	26.7	15.4	-	259.0	149.5
3DS 65-200/18.5	3DP 65-200/18.5	160L	18.5	25	20.12	91.6	92.8	92.4	0.9	-	33.0	19.1	-	353.1	203.9
3DS 65-200/22	3DP 65-200/22	180M	22	30	23.73	90.5	92.7	92.7	0.89	-	37.5	21.7	-	307.5	178.0

3D NOISE DATA

Pump type	L_{pA} - dB(A) *
3D 32-125/1.1 (M)	69
3D 32-160/1.5 (M)	
3D 32-160/2.2 (M)	
3D 32-200/3.0	76
3D 32-200/4.0	
3D 32-200/7.5	79
3D 40-125/1.5 (M)	69
3D 40-125/2.2 (M)	
3D 40-160/3.0	76
3D 40-160/4.0	
3D 40-200/5.5	79
3D 40-200/7.5	
3D 40-200/11	82
3D 50-125/2.2 (M)	69
3D 50-125/3.0	76
3D 50-125/4.0	
3D 50-160/5.5	79
3D 50-160/7.5	
3D 50-200/9.2	82
3D 50-200/11	
3D 50-200/15	86
3D 65-125/4.0	76
3D 65-125/5.5	79
3D 65-125/7.5	
3D 65-160/7.5	
3D 65-160/9.2	82
3D 65-160/11	
3D 65-160/15	86
3D 65-200/15	
3D 65-200/18.5	
3D 65-200/22	

3DS–3DP NOISE DATA

Pump Type		L_{pA} - dB(A) *
3DS 32-125/1.1	3DP 32-125/1.1	<70
3DS 32-160/1.5	3DP 32-160/1.5	
3DS 32-160/2.2	3DP 32-160/2.2	
3DS 32-200/3.0	3DP 32-200/3.0	
3DS 32-200/4.0	3DP 32-200/4.0	
3DS 32-200/7.5	3DP 32-200/7.5	72
3DS 40-125/1.5	3DP 40-125/1.5	<70
3DS 40-125/2.2	3DP 40-125/2.2	
3DS 40-160/3.0	3DP 40-160/3.0	
3DS 40-160/4.0	3DP 40-160/4.0	
3DS 40-200/5.5	3DP 40-200/5.5	72
3DS 40-200/7.5	3DP 40-200/7.5	
3DS 40-200/11	3DP 40-200/11	74
3DS 50-125/2.2	3DP 50-125/2.2	<70
3DS 50-125/3.0	3DP 50-125/3.0	
3DS 50-125/4.0	3DP 50-125/4.0	
3DS 50-160/5.5	3DP 50-160/5.5	72
3DS 50-160/7.5	3DP 50-160/7.5	
3DS 50-200/9.2	3DP 50-200/9.2	
3DS 50-200/11	3DP 50-200/11	74
3DS 50-200/15	3DP 50-200/15	
3DS 65-125/4	3DP 65-125/4	<70
3DS 65-125/5.5	3DP 65-125/5.5	72
3DS 65-125/7.5	3DP 65-125/7.5	
3DS 65-160/7.5	3DP 65-160/7.5	
3DS 65-160/9.2	3DP 65-160/9.2	
3DS 65-160/11	3DP 65-160/11	74
3DS 65-160/15	3DP 65-160/15	
3DS 65-200/15	3DP 65-200/15	
3DS 65-200/18.5	3DP 65-200/18.5	
3DS 65-200/22	3DP 65-200/22	77

The contents of this publication must not be considered binding.
EBARA Pumps Europe S.p.A. reserves the right to make any modifications considered necessary without prior notice.

EBARA Pumps Europe S.p.A.
Via Torri di Confine 2/1 int. C
36053 Gambellara (Vicenza), Italy
Phone +39 0444 706811
ebarapumps.epe@ebara.com
www.ebaraeurope.com

EBARA Pumps Europe S.p.A. GERMANY
Elisabeth-Selbert-Straße 2
63110 Rodgau, Germany
Phone +49 (0) 6106-660 99-0
info.epde@ebara.com

EBARA Pumps South Africa (PTY) LTD
26 Kyalami Boulevard,
Kyalami Business Park, 1684, Midrand,
Gauteng, South Africa
Phone +27 11 466 1844
ebara.epsa@ebara.com

EBARA Pumps Europe S.p.A. UK
Unit A, Park 34
Collett Way - Didcot
Oxfordshire - OX11 7WB, United Kingdom
Phone +44 1895 439027
marketing.epuk@ebara.com

EBARA Pumps Europe S.p.A. FRANCE
122, Rue Pasteur
69780 Toussieu, France
Phone: +33 04 72 76 94 82
mktg.efr@ebara.com

EBARA Pumps East Africa
Sunflag Industrial Park, Unit 5, Mombasa Road,
P.O BOX 18851-00100, Nairobi, Kenya
Tel. +254709491900
info.epea@ebara.com
www.ebaraeurope.co.ke

EBARA POMPY POLSKA Sp. z o.o.
ul. Działkowa 115 A
02-234 Warszawa, Poland
Phone +48 22 3909920
marketing.epl@ebara.com

EBARA Pumps Europe Nordic
Gustav III Boulevard 34,
169 73 Solna, Sweden
info.epen@ebara.com

EBARA West Africa Limited
ewasales.epe@ebara.com